OMRON

Safety Light Curtain

F3SJ Series

Three versions available to meet your exact safety needs.

All versions conform to the latest PLe/Safety Category 4 and SIL3 requirements.

» ADVANCED type supports finger protection, and complex blanking and muting functions

» EASY type simple and affordable hand protection

» BASIC type simple hand protection and simple muting functions

realizing

SAFETY, TECHNOLOGY & INNOVATION

Offering the best selection of safety light curtains for your guarding needs.

Three F3SJ types allow easy selection for your application.

Omron's new F3SJ series of safety light curtains offers a tailored approach for a variety of production environments. Conventional safety light curtains offer full-featured models, even when only simple intrusion detection is needed. The F3SJ series offers a product range that allows you to choose the best product according to your application needs.

The EASY type has been added for simple hand detection, while the BASIC type adds the potential for series connection and simple muting functions.

The F3SJ series now allows you to select the best safety light curtain for your application environment without paying for unused functions.

- For simple and affordable hand protection:
  The EASY type (F3SJ-E)
- For simple hand protection, series connection and muting functions:
  The BASIC type (F3SJ-B)
- For finger protection, series connection, complex blanking and muting functions:
  The ADVANCED type (F3SJ-A)

Wiring time reduced by
more than 50%!*
Simple Wiring Connector
*Comparison with existing OMRON products.
>>p.12

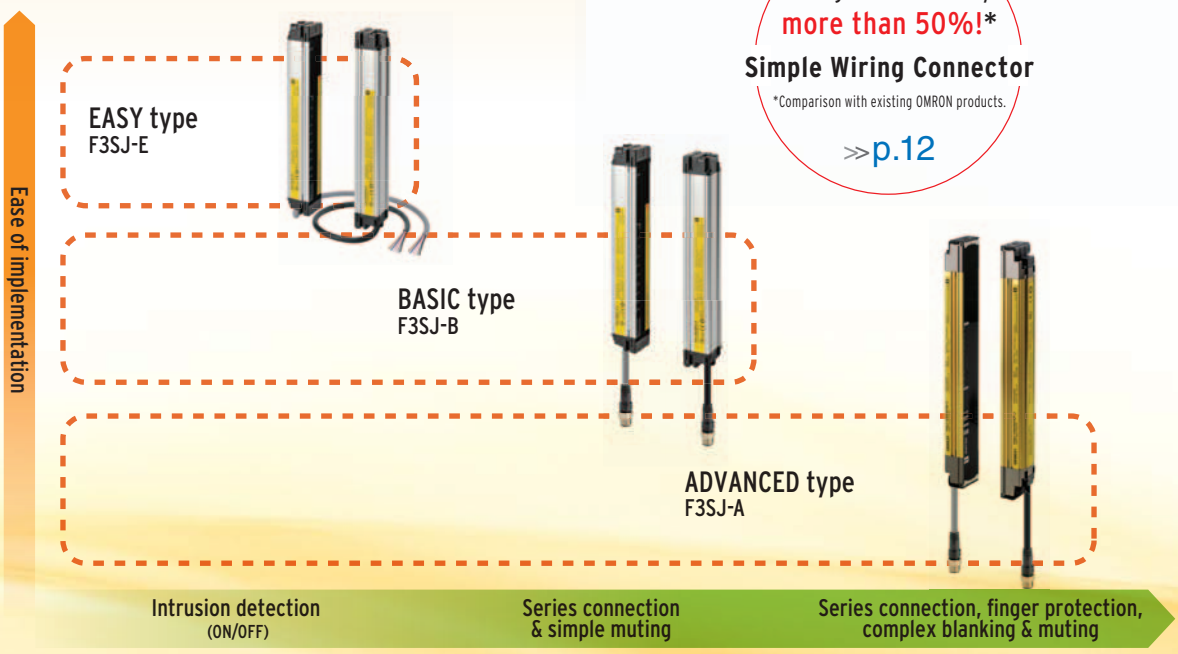

[Applicable Standards]
EN ISO 13849-1: PLe/Safety Category 4
IEC 61496-1,-2: Type 4
IEC 61508-1 to 3: SIL3

Authenticated under major safety standards including European standards.

Easy to install
EASY type (F3SJ-E)

Can be used for simple hand intrusion detection. Mounting now takes less than half the man-hours that conventional models take.

Despite its simplicity, the EASY type is a highly reliable safety light curtain.

Easy to maintain
BASIC type (F3SJ-B)

The muting function allows use of the safety light curtain in a variety of manufacturing environments.

The flexible mounting supports up to three sets of series-connected sensors.

High functionality
ADVANCED type (F3SJ-A)

The detection capability supports finger protection through use of 14mm resolution. The ADVANCED type has a a wide variety of muting and blanking functions to increase productivity.

· STI is a trademark or registered trademark of OMRON Corporation in Japan and other countries.
· Microsoft product screen shot(s) reprinted with permission from Microsoft Corporation.
· Other company names and product names in this document are the trademarks or registered trademarks of their respective companies.

* As the beams are infrared, they are invisible to the naked eye.

Implementation cost reduction with 1/2* the mounting time: Start with the "EASY type"

* Comparison with existing OMRON products.

The EASY type safety light curtain well is suited for straight forward on/off detection applications.

By carefully selecting the available functions, we have reduced man hours necessary for installation by approximately 1/2 when compared with existing OMRON models.

Reduced installation time means added savings to your project's budget, start with the EASY type.

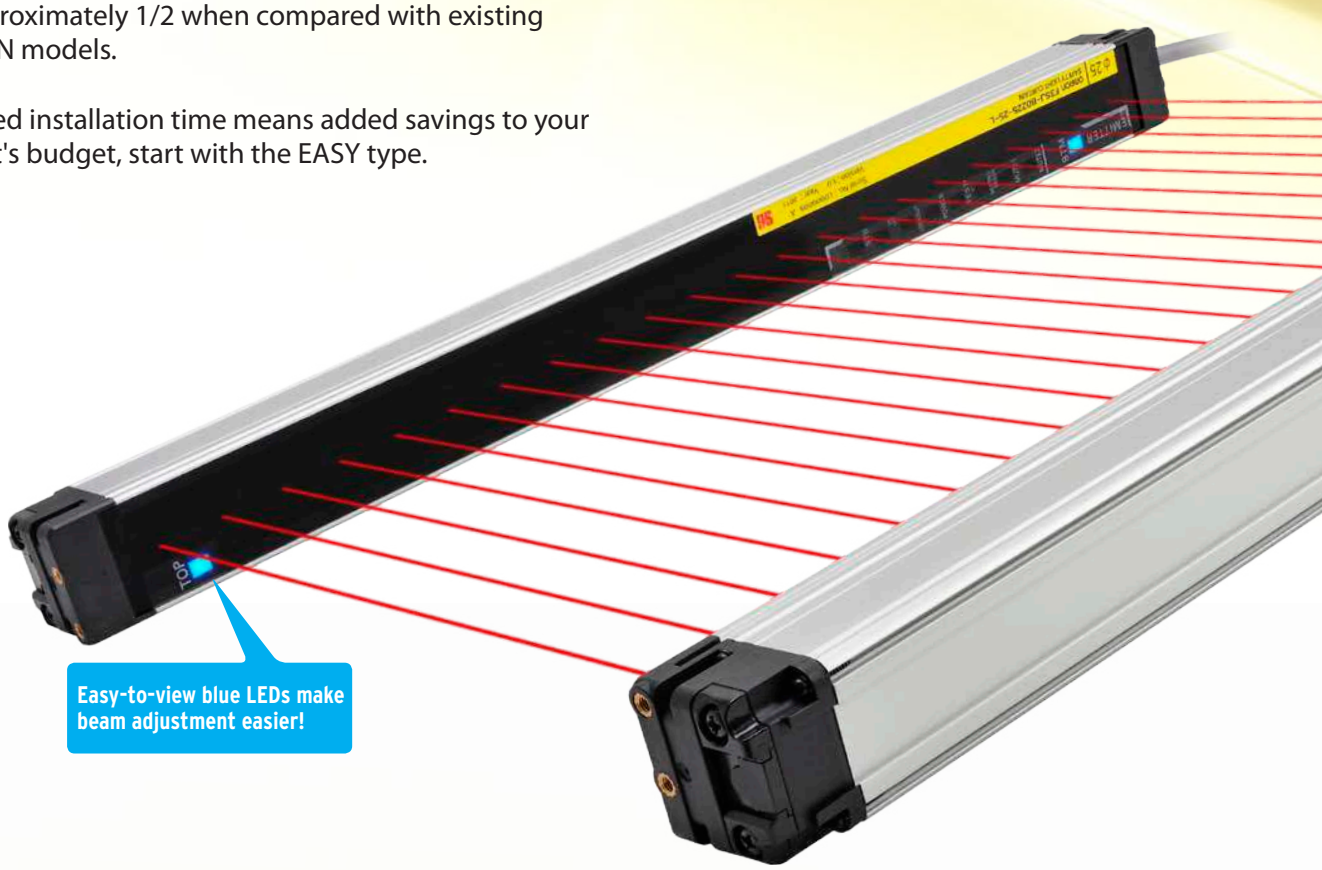

Machine safety first, narrowed down to the simplest functions:

Upon detection of personnel, the machine stops.

Simple yet very optimal.

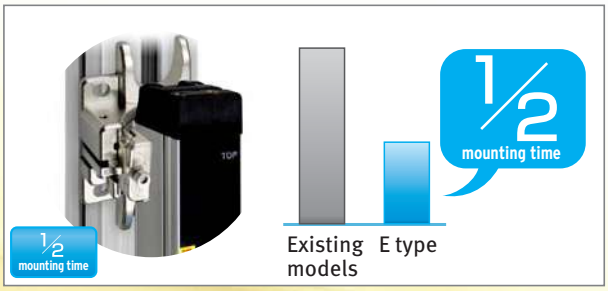

1/2 the mounting time
Fixed response time makes calculation of the safety distance is easier.

Reduced wiring, one-touch brackets and easy-to-view alignment beams all add up to cost savings.

Additionally, with one fixed response time, it is know easier to calculate the safety distance.

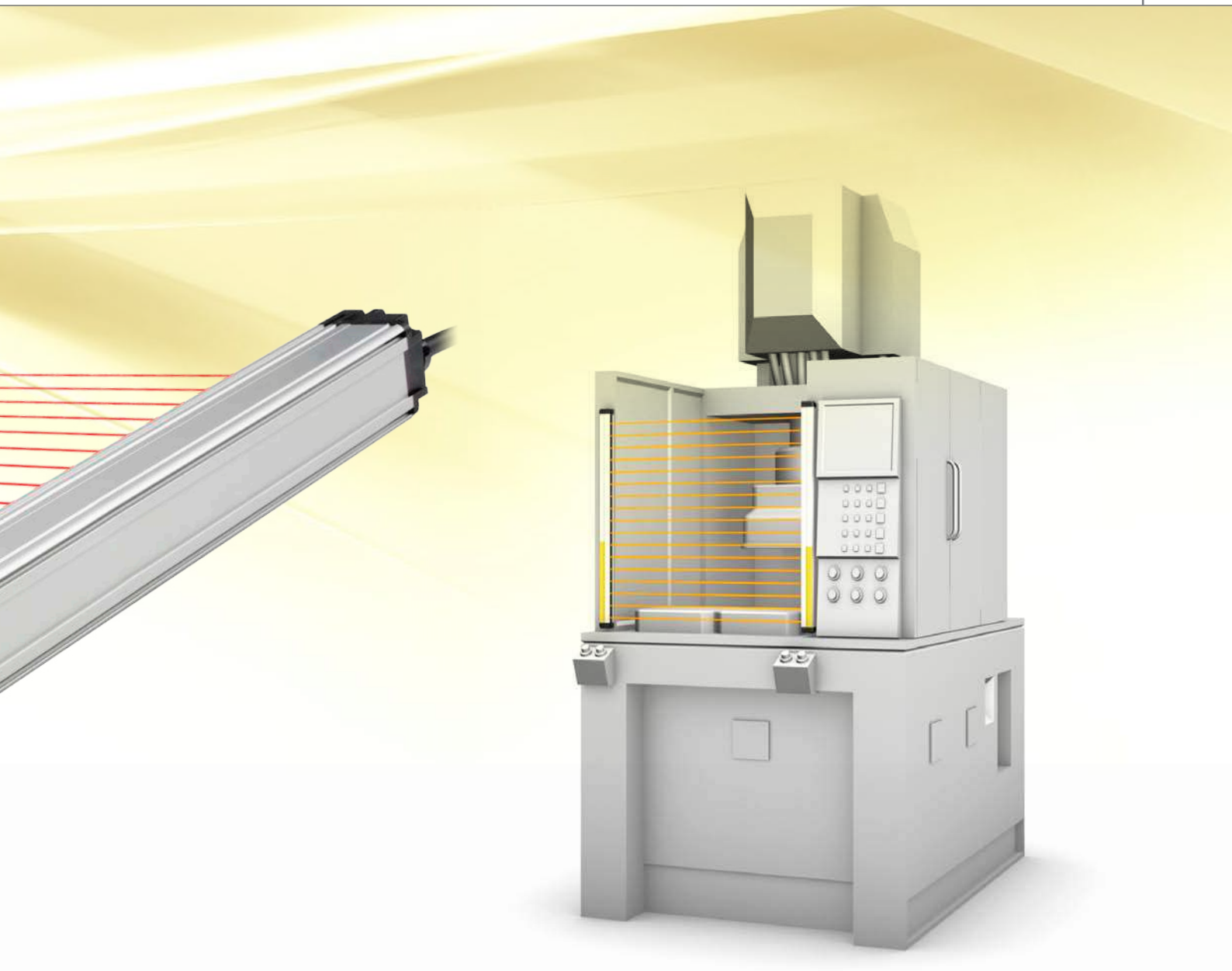

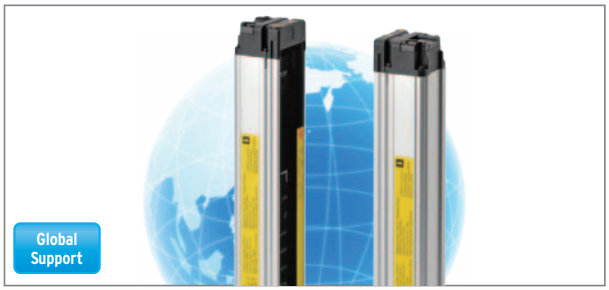

Global Support

OMRON will support you through the our global network

Easy-to-view Diagnostics

These indicators enable you to intuitively know the status and cause of any error.
Allowing you faster installation while reducing machine down time.

Fits any site, equipped with muting functions and series connection: Use the "BASIC type"

In addition to the simple functions inherited from the EASY type, such as global support, easy-to-view indicators, the BASIC type includes series connection and simple muting functions . This enables the BASIC type to satisfy installations that require multiple safety light curtains.

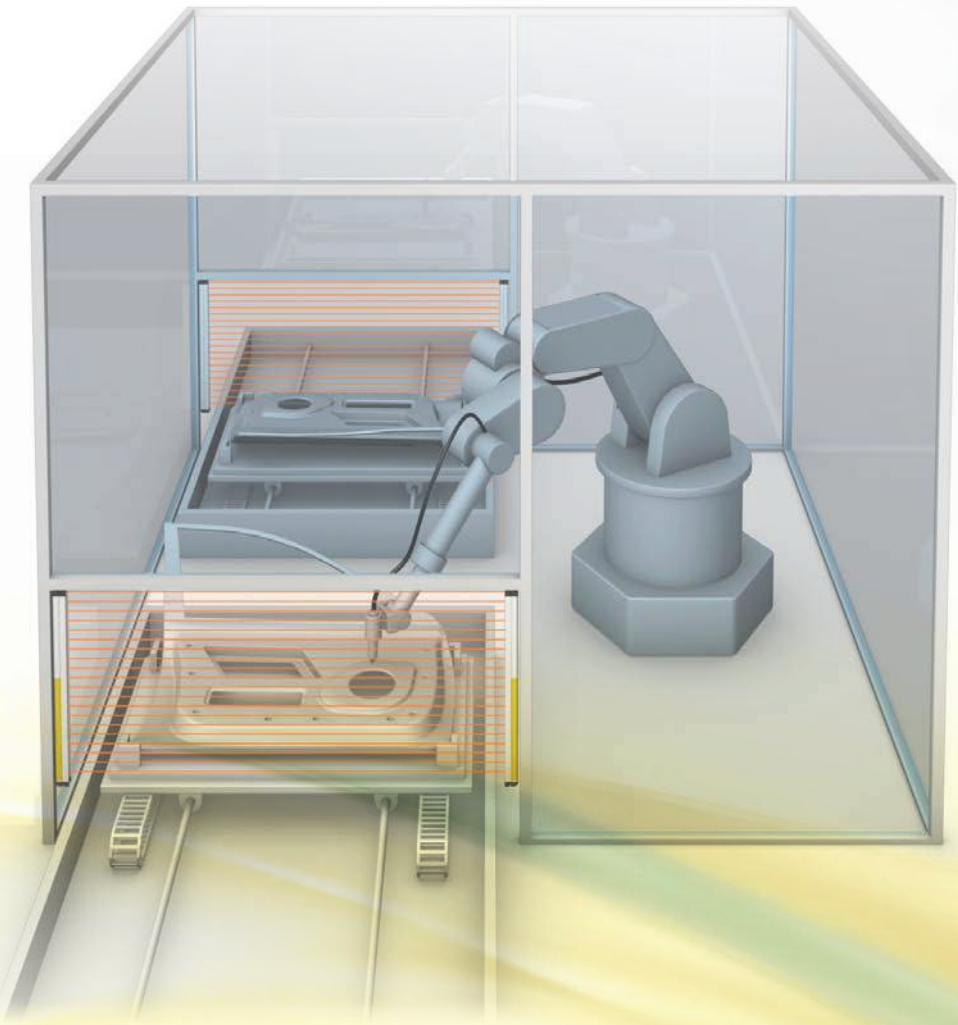

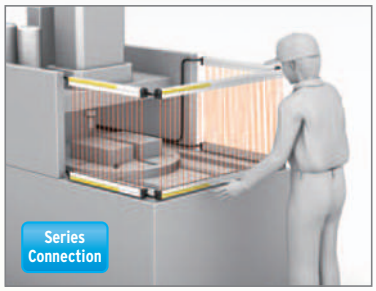

Up to three sets-connected in series

It is possible to connect up to three sets of safety light curtains in series. These sensors can be placed in a U-shaped or L-shaped pattern with a single power line, thus requiring less wiring.

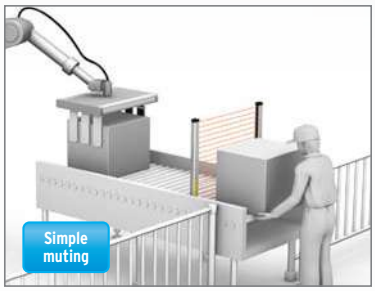

Instant visibility of process trouble during muting

The BASIC type includes a muting function which temporarily disables the safety light curtain when a workpiece passes through. In the event of any trouble occurring, the error can be instantly recognized from the pattern of the LED indicators, allowing for a fast solution.

Functions inherited from the EASY type

Simple functions such as universal power voltage specification, easy-to-view diagnostics, a fixed response time have been inherited from the EASY type, As a result, expect reduced work-hours at each stage of use, from design and installation to operation.

Multi-functional for special applications such as finger protection: the "ADVANCED" type

The detection capability supports finger protection through use of 9 mm resolution. The ADVANCED type is equipped with various functions such as blanking, muting and the programing of warning zones. All settings can be done via an easy to use software tool. This Tool simplifies installations that were previously complicated, again our way of reducing cost and increasing productivity.

• Beam alignment is easier.

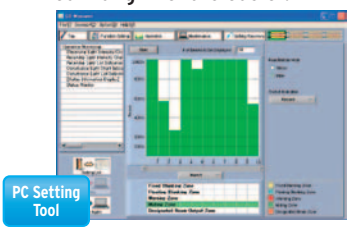

Tool for setting parameters and checking the system status

With the ADVANCED type (F3SJ-A) "SD Manager", all parameters can be set and the system status can be checked with a personal computer. Complex settings are now simple to configure

• Detection capability: 9 mm

Detection capability supports finger-protection

Even if the distance from the hazard is short, we have prepared a lineup that includes safety light curtains with a detection capability of 14 mm.

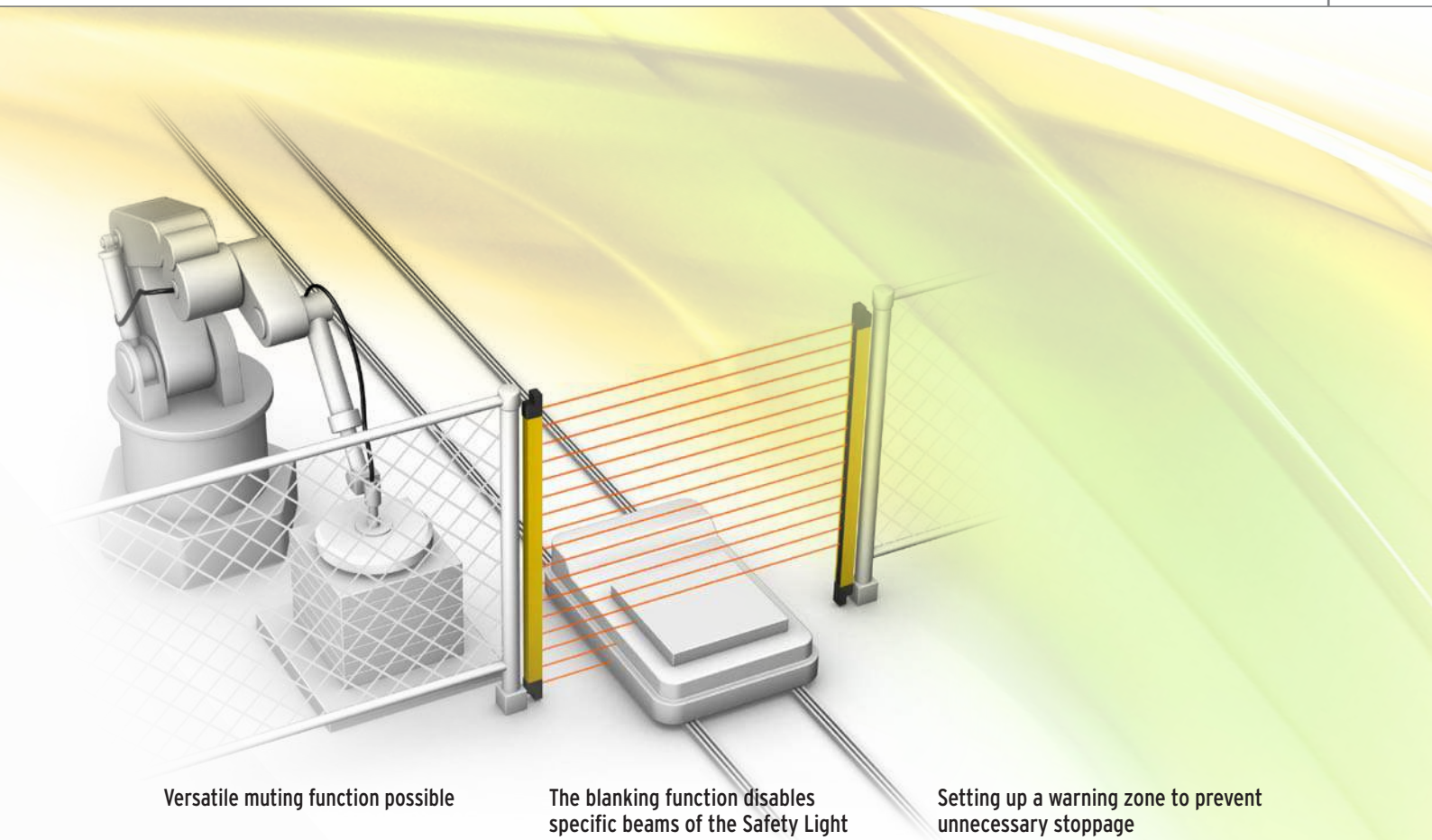

Versatile muting function possible

Equipped with partial muting that disables only the beams where a workpiece passes through, and position detection muting that disables the beams while detecting the position of a machine or robot.

The blanking function disables specific beams of the Safety Light Curtain

If a part of the mechanical equipment is within the detection zone of the Safety Light Curtain, the relevant beams can be disabled. This is possible not only with non-moving parts but also with moving parts.

Setting up a warning zone to prevent unnecessary stoppage

Under normal use, if an intrusion occurs in the safety zone, the machine will stop immediately. However, use of a warning zone will only notify the operator that an intrusion has occurred. This can be used to prevent carelessness resulting in machine stoppage on the part of the operator.

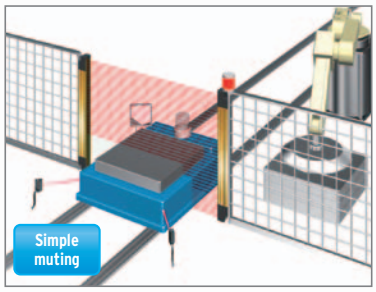

Partial muting

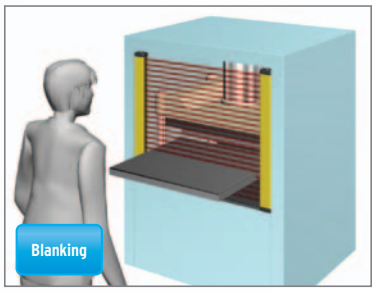

Fixed blanking

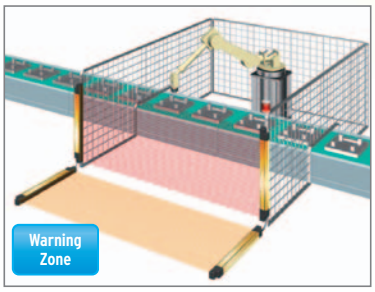

Dividing the zone between series-connected sensors

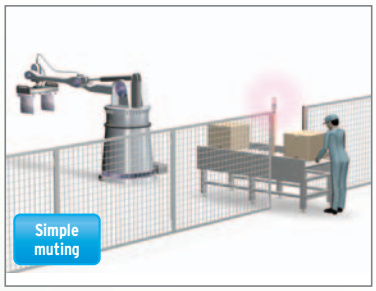

Position detection muting

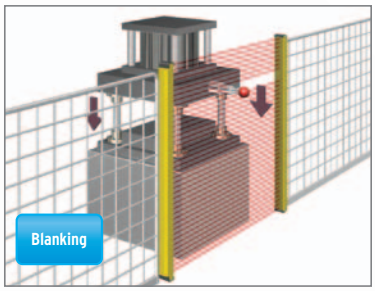

Floating blanking

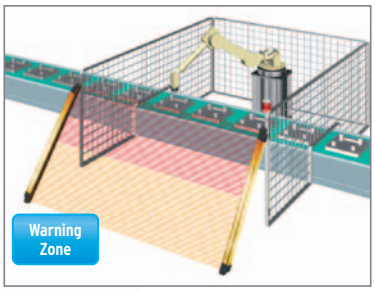

A single sensor zone can also be divided

Easy and fast mounting with one-touch brackets*

EASY BASIC

* Sold separately

Patented

OMRON has developed "one-touch" brackets which speed mounting to aluminum framing and reduce mounting time in half,when compared with existing models. This unique design allows for smooth horizontal movement, beam alignment is easy.

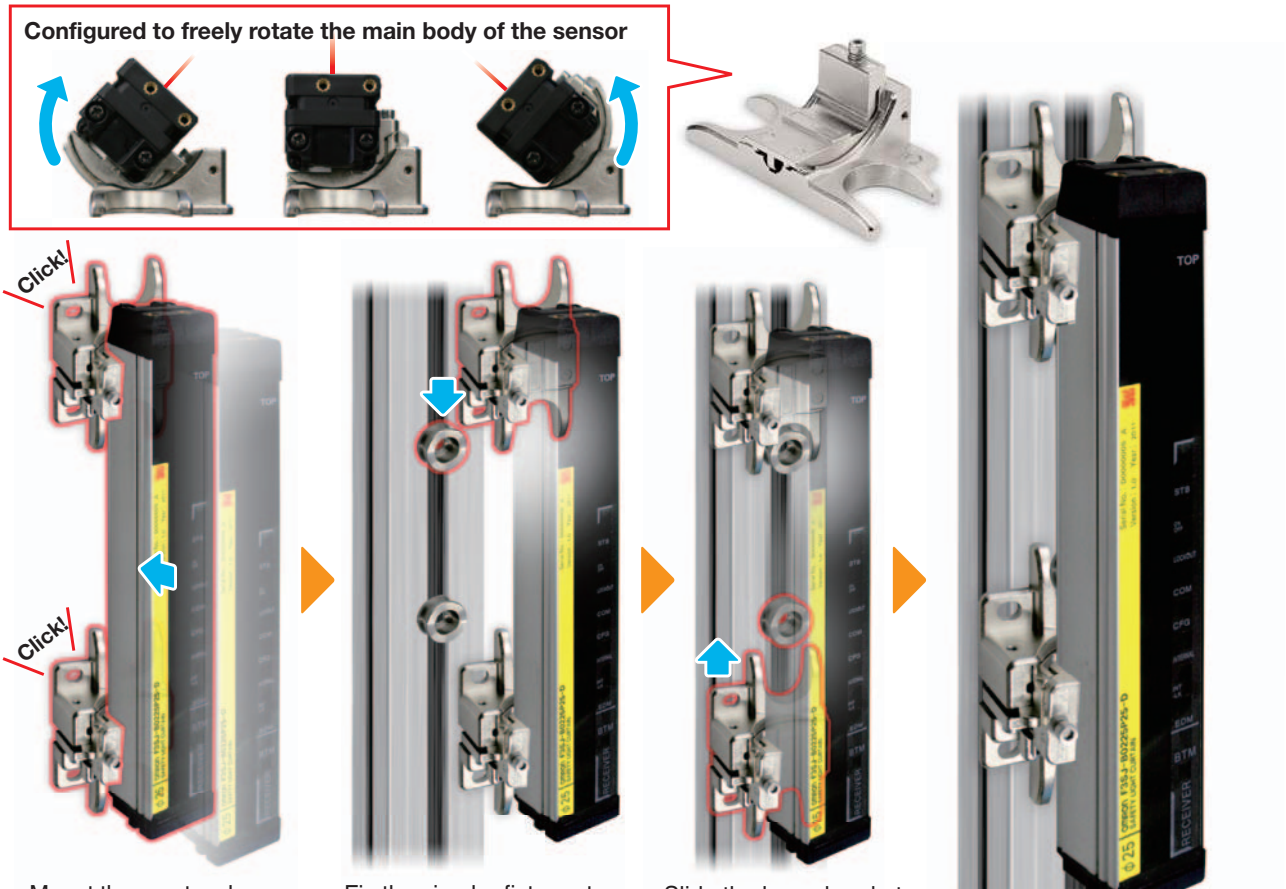

Mount the one-touch brackets to the main sensor body. Use the clamps to tightly clamp the upper body of the sensor while lightly clasping the lower body.

Fix the circular fixtures to the surface of the aluminum frame and set the upper bracket onto the upper circular fixture.

Slide the lower bracket up towards the lower circular fixture and tightly clamp the lower body of the sensor. Once done, mounting is concluded.

Top and bottom blue LEDs enabling beam alignment

EASY BASIC

Simple positional alignment can be done using the blue LEDs at the top (TOP) and bottom (BTM) of the emitter and receiver. With the blue LEDs ON, you can see at a glance that the beams' positions are correctly aligned.

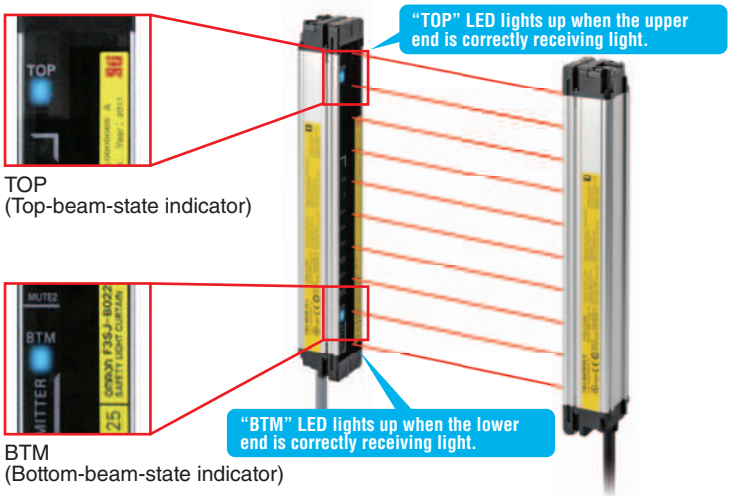

Laser pointer used to easily align the beams*

EASY BASIC ADVANCED

* Sold separately

Use of the laser pointer allows simple alignment of the beams especially across long distances. This saves approximately 60% of installation time.

F3SJ Setup Time Comparison with/without the F39-PTJ

(OMRON Investigation)

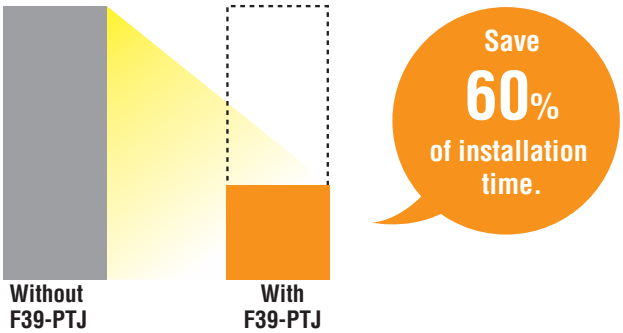

(Conditions: The time was measured from temporary attachment to the pole until the light beam is detected with an mounting distance of 3 m and no tilt to mounting pole.)

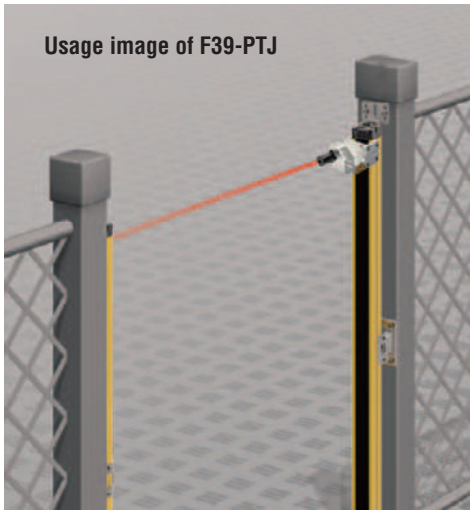

Easy-to-understand diagnostics

EASY BASIC

Light curtain status can be immediately determined as the LED will light to indicate the status or possible error.

Communication error (EASY/BASIC type)

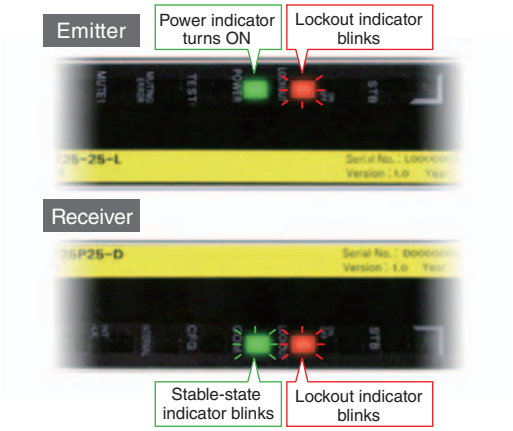

Input error (BASIC type)

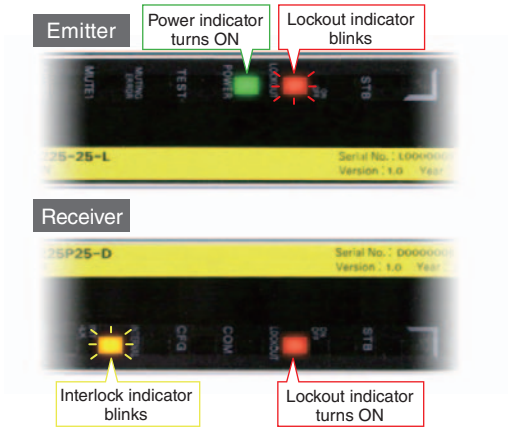

Industry First! Error indication while muting is in progress.

BASIC

The days of searching through user manuals to find the cause of certain muting errors are long gone. Now these errors and their causes can be well understood.

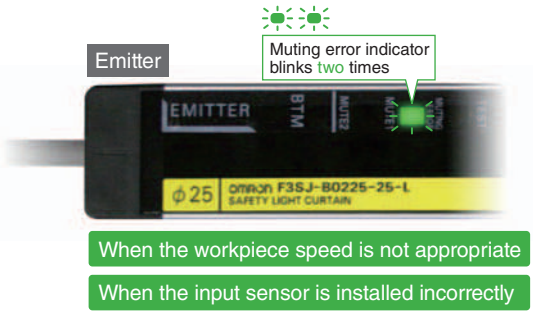

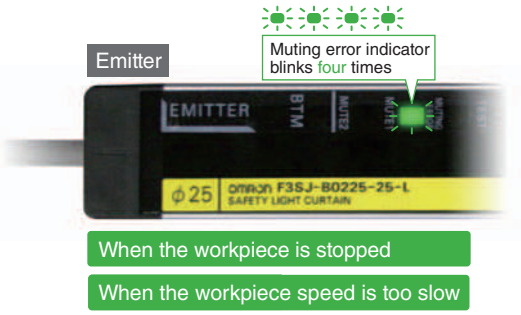

"Simple wiring connector" used to reduce wiring work by more than 50%*

BASIC ADVANCED

The connector can be used to easily connect between an emitter and a receiver, reducing the required wiring time by more than 50%.
Less wiring also reduces the width of the terminal block, saving valuable space in the control panel.

Note: The simple wiring connector can be used for F3SJ-A/B in auto reset mode only, not for F3SJ-E.

*Comparison with existing OMRON products.

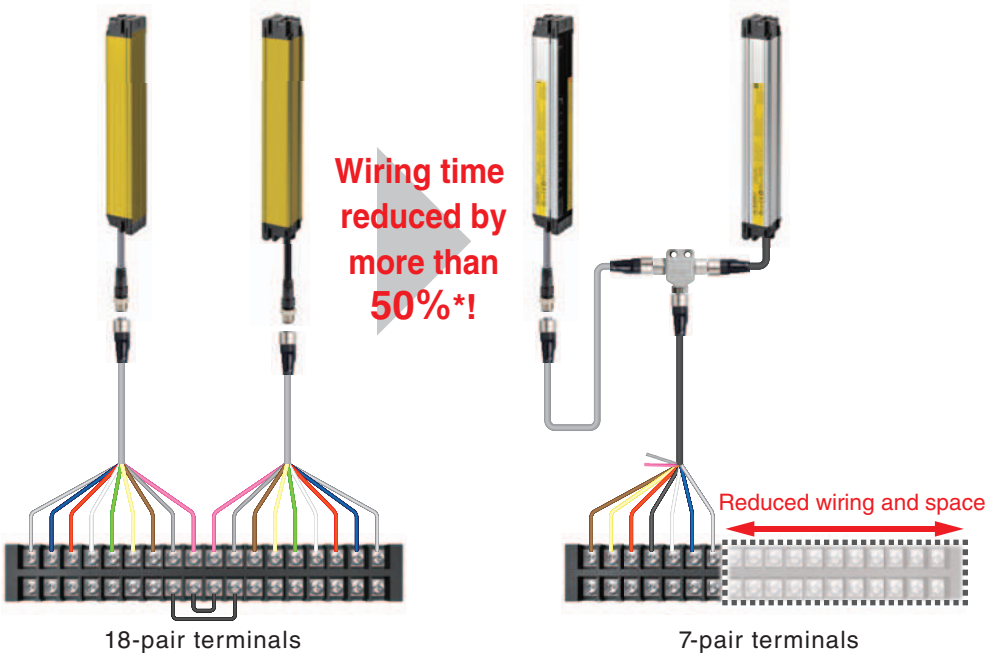

Tool for setting parameters and checking the system status

ADVANCED

"SD Manager" PC Setting Support Software (For F3SJ-A)

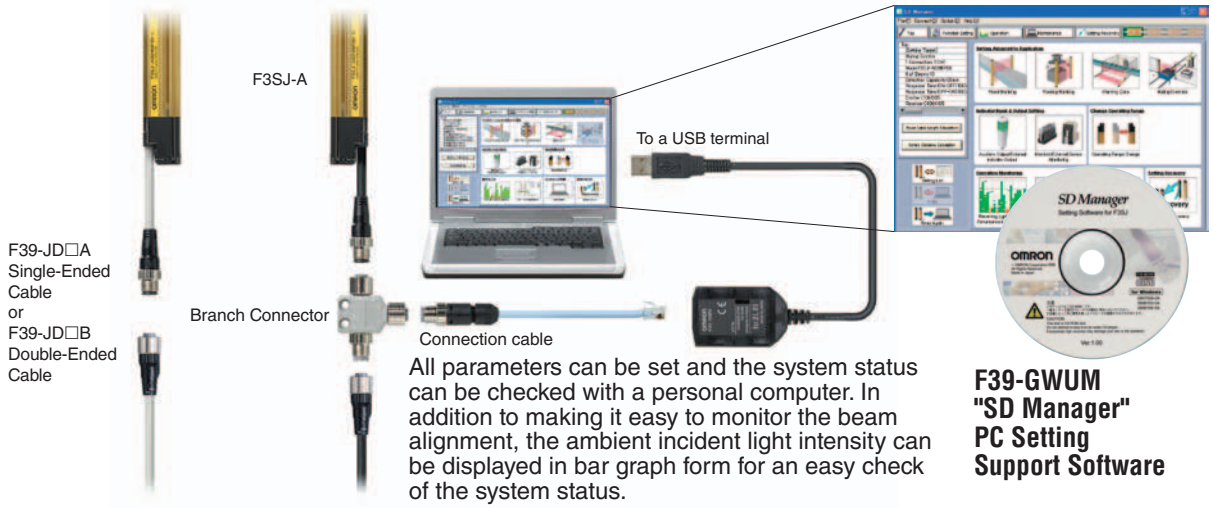

All parameters can be set and the system status can be checked with a personal computer. In addition to making it easy to monitor the beam alignment, the ambient incident light intensity can be displayed in bar graph form for an easy check of the system status.

F39-GWUM "SD Manager" PC Setting Support Software

The "SD Manager" PC Setting Support Software helps reduce the time required for installing and troubleshooting the Safety Light Curtain.

- Beam alignment is easier.

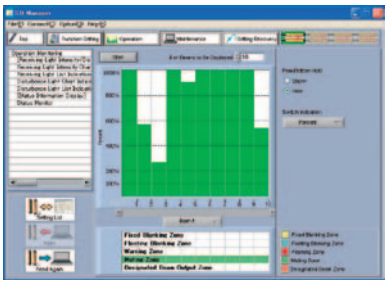

The incident light level can be displayed in a bar graph for each beam.

- The ambient incident light intensity can be checked.

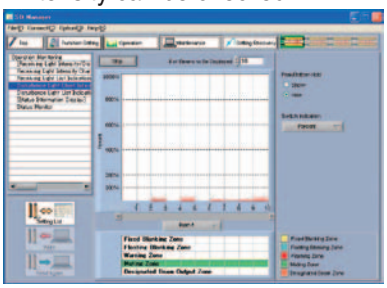

The incident light level when the light emission of the Safety Light Curtain is stopped is displayed in a bar graph.

- The error log can be displayed.

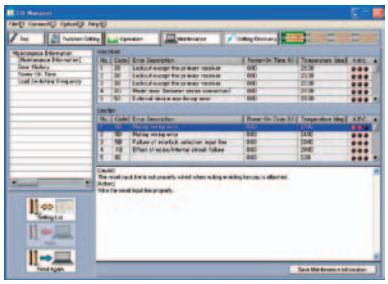

The cause of the errors and countermeasures are both displayed.

Added the ENVIRONMENT RESISTANT type (F3SJ-B□□□□P25-02TS) to the E3SJ series.

The coolant-resistant structure supports use in a severe work environment

ENVIRONMENT RESISTANT

Protects the sensor unit from direct exposure to the coolant.

The aluminum frame and transparent plate protect the sensor unit from direct exposure to the coolant. The cover protects the sensor's detection surface from collision with a workpiece, etc.

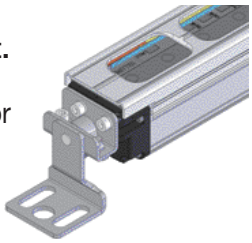

Protects the sensor from entry of the coolant that runs around the sensor.

The coolant-resistant H-NBR sponge used inside the cover protects the sensor from entry of the coolant that runs around the sensor.

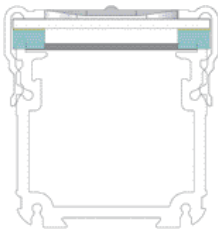

Note: The sensor may be affected depending on the type of the cutting oil. Check the oil type before use.

Achieving muting function without a controller

BASIC ADVANCED

The muting function temporarily disables the light curtain when an object must pass through the detection zone, such as when supplying a workpiece to your equipment. In the past, this function required a dedicated muting controller, but now it is built into the F3SJ. To use the muting function, purchase the Muting Key Cap (for F3SJ-B: F39-CN10 and for F3SJ-A: F39-CN6) (sold separately). The muting function is enabled simply by replacing the Unit's cap with this Key Cap. In addition, a muting sensor that determines the muting timing, as well as a muting lamp that notices the muting status to other operators, should be connected to the F3SJ.
The muting time for the F3SJ-A can be set via the software tool.

Use example of a muting key cap for F3SJ-A

Built-in muting function

No controller required. Simply attach the Key Cap (sold separately) to the sensor.

Key caps for muting

F39-CN6 (for F3SJ-A) F39-CN10 (for F3SJ-B)

The Safety Light Curtain can be disabled when an AGV carrying a workpiece passes through.

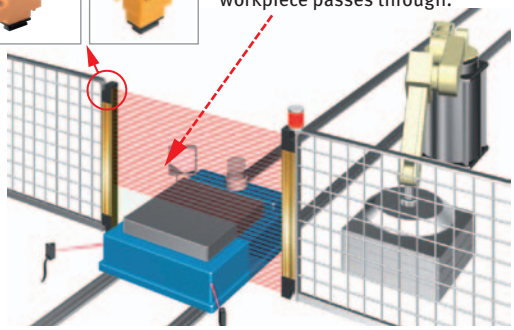

Equipped with two muting functions

ADVANCED

With F3SJ-A, the muting function temporarily disables the Safety Light Curtain when an object must pass through the detection zone, such as when supplying a workpiece to your equipment. "Partial muting," which further heightens the level of safety, and "position detection muting," which allows muting when the safety status can be determined by the position of a machine (such as a robot), have been newly added to the muting function.

Partial muting

Partial muting raises safety by muting only the beams of the Safety Light Curtain in the area where the workpiece passes through, while preventing muting in all other areas.

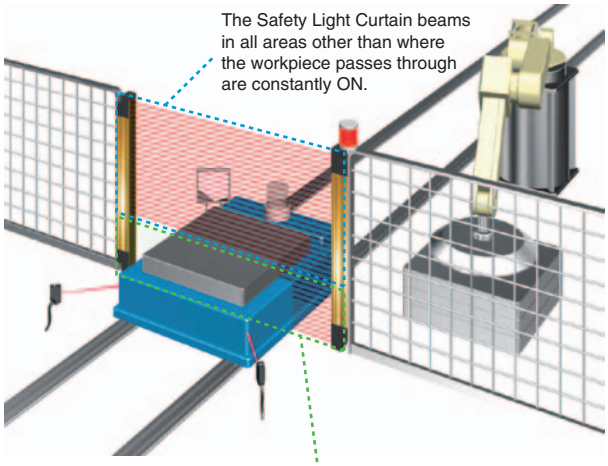

Position detection muting

This is used in applications where the workpiece is set in position each time by an operator, and then a turntable or positioning robot moves the workpiece to the area where the work is done. A limit switch or other means is used to detect when the robot is in a safe position, and muting is then applied.

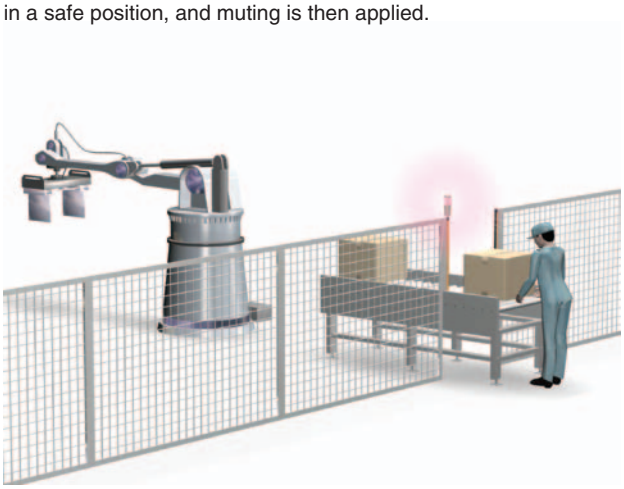

List of specifications and features

		EASY type	BASIC type			ADVANCED type	
		F3SJ-E	F3SJ-B	F3SJ-B-01TS	F3SJ-B-02TS	F3SJ-A	
		For simple hand protection 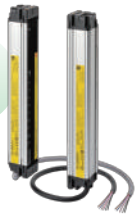	A combination of performance and functionality			For complex safety solutions	
Application	Finger protection					●	
	Hand and arm protection	●	●	●	●		●
	Body protection						
Specification	Detection capability	25-mm dia.	25-mm dia.			14-mm dia.	20-mm dia.
	Beam gap	20 mm	20 mm			9 mm	15 mm
	Operating range	0.2 to 7 m	0.2 to 7 m		0.2 to 6 m	0.2 to 9 m *1	
	Protective height	185 to 1,105 mm	185 to 2,065 mm		225 to 1,985 mm	245 to 1,271 mm	245 to 1,505 mm
	Number of beams	8 to 54	8 to 102		10 to 98	26 to 140	16 to 100
Feature	PNP/NPN Selection	–	–			–	
	External Test	🔧	🔧			🔧	
	Interlock	–	🔧	–		💻 🔧	
	Pre-Reset	–	–			–	
	External Device Monitoring (EDM)	–	🔧			💻 🔧	
	Auxiliary Output	–	–			💻	
	Muting	–	⊓	–	⊓	⊓ / ⊓+💻	
	Blanking	–	–			💻	
	Reduced Resolution	–	–			–	
	Warning Zone	–	–			💻	
	Scan Code Selection	(Not required for wired synchronization)					
	Operating Range Selection	–	–			💻	
	Response Time Adjustment	–	–			–	
	Designated Beam Output	–	–			💻	
Connection/ wiring	Cascade Connection	–	🔧			🔧	
	Simple wiring connector	–	🔧			🔧	
Environmental resistance	Degree of protection	IP65	IP65			IP65	
Accessory	Lamp	–	–			●	
	Bluetooth communication unit	–	–			–	
	SD Manager	–	–			●	
	Laser pointer	●	●		–	●	
More information		Page 18	Page 30			Page 66	

*1. Varies depending on the protective height.

Setting by DIP Switch Setting by Configuration Tool Setting by Wiring Setting by End Cap/Key Cap

		More rugged – F3SG-R Series				
		F3SG-RA	F3SG-RR	F3SG-RE		
		●	●	●	Finger protection	Application
●		●	●	●	Hand and arm protection	
	●				Body protection	
30-mm dia.	55-mm dia.	14-mm dia./30-mm dia.	14-mm dia./25-mm dia.	14-mm dia./30-mm dia.	Detection capability	Specification
25 mm	50 mm	10 mm/20 mm	10 mm/20 mm	10 mm/20 mm	Beam gap	
		0.3 to 10 m/0.3 to 20 m	0.3 to 10 m/0.3 to 17 m	0.3 to 10 m/0.3 to 20 m	Operating range	
245 to 2,495 mm	270 to 2,470 mm	160 to 2,080 mm/190 to 2,510 mm	240 to 1,920 mm	160 to 2,080 mm/190 to 2,510 mm	Protective height	
10 to 100	6 to 50	15 to 207/8 to 124	23 to 191/12 to 96	15 to 207/8 to 124	Number of beams	
				–	PNP/NPN Selection	Feature
		*2	*2	–	External Test	
				–	Interlock	
				–	Pre-Reset	
				–	External Device Monitoring (EDM)	
				–	Auxiliary Output	
				–	Muting	
				–	Blanking	
				–	Reduced Resolution	
				–	Warning Zone	
				–	Scan Code Selection	
			–		Operating Range Selection	
				–	Response Time Adjustment	
				–	Designated Beam Output	
				–	Cascade Connection	Connection/ wiring
					Simple wiring connector	
		IP67	IP67, IP67G	IP67	Degree of protection	Environmental resistance
		●	●	–	Lamp	Accessory
		●	●	–	Bluetooth communication unit	
		SD Manager2	SD Manager2	–	SD Manager	
		●	●	●	Laser pointer	
		Refer to the F3SG-R Catalog (Cat. No. F094).			More information	

*2. Supports PNP/NPN by switching between 0 V and 24 V active.

Refer to the F3SG-R Series Catalog (Cat. No. F094) or visit the Omron website for details of the F3SG-R Series.

For details F3SG-R Search www.ia.omron.com/

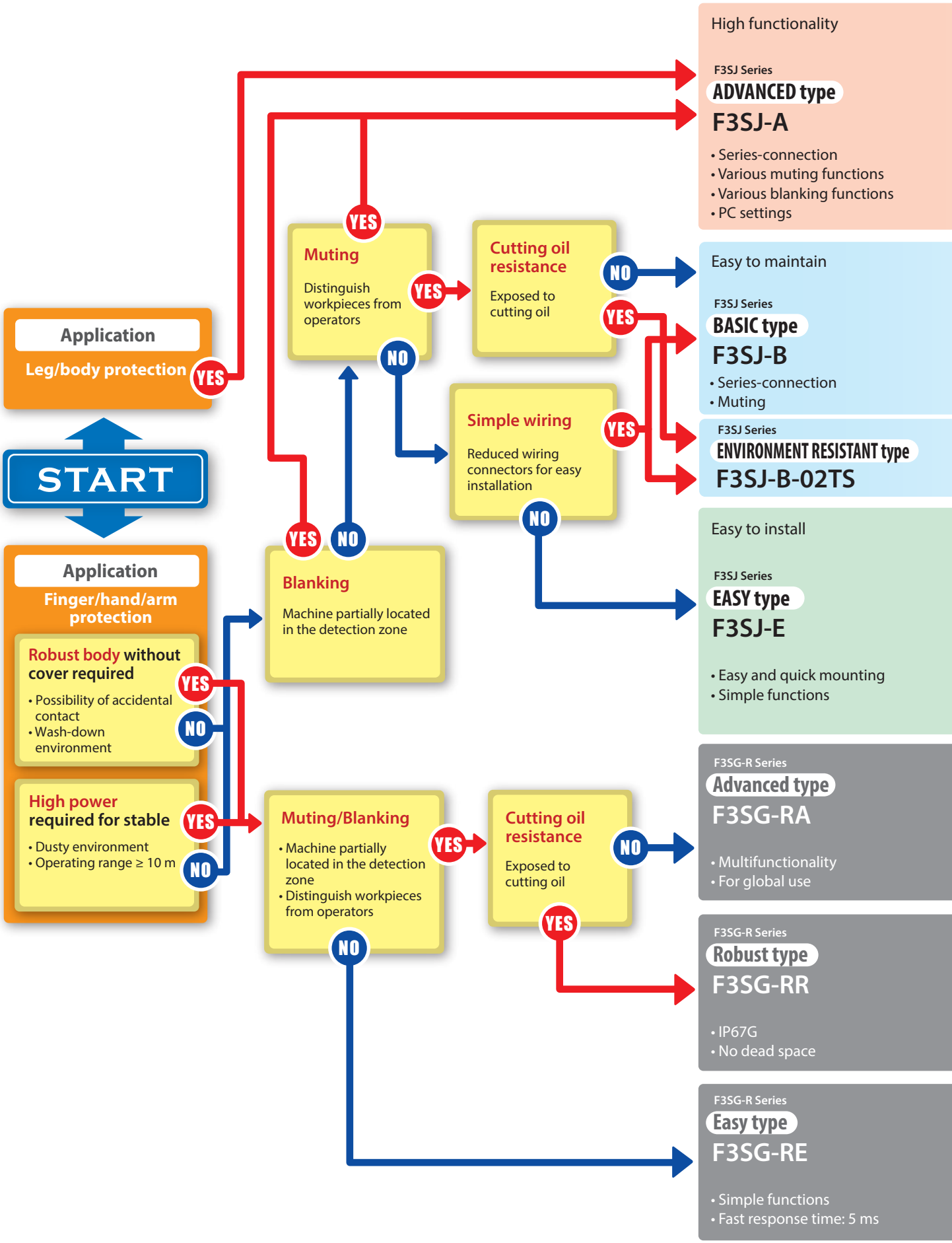
START
Application
Leg/body protection
YES
Application
Finger/hand/arm protection
Robust body without cover required
• Possibility of accidental contact
• Wash-down environment
YES
NO
High power required for stable
• Dusty environment
• Operating range ≥ 10 m
YES
NO
Muting
Distinguish workpieces from operators
YES
NO
Cutting oil resistance
Exposed to cutting oil
NO
YES
Simple wiring
Reduced wiring connectors for easy installation
YES
NO
Blanking
Machine partially located in the detection zone
YES
NO
Muting/Blanking
• Machine partially located in the detection zone
• Distinguish workpieces from operators
YES
NO
Cutting oil resistance
Exposed to cutting oil
NO
YES
High functionality
F3SJ Series
ADVANCED type
F3SJ-A
• Series-connection
• Various muting functions
• Various blanking functions
• PC settings
Easy to maintain
F3SJ Series
BASIC type
F3SJ-B
• Series-connection
• Muting
F3SJ Series
ENVIRONMENT RESISTANT type
F3SJ-B-02TS
Easy to install
F3SJ Series
EASY type
F3SJ-E
• Easy and quick mounting
• Simple functions
F3SG-R Series
Advanced type
F3SG-RA
• Multifunctionality
• For global use
F3SG-R Series
Robust type
F3SG-RR
• IP67G
• No dead space
F3SG-R Series
Easy type
F3SG-RE
• Simple functions
• Fast response time: 5 ms

	Protective height	Specifications	Brackets	Cable	Accessories (sold separately)
	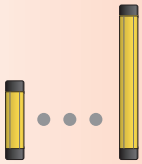 14-mm dia. 245 to 1,271 mm (26 to 140 beams) * When the minimum object resolution is 14 mm and the beam gap is 9 mm.	**Detection capability** 14-mm dia. - **Beam gap** 9 mm - **Operating range** 0.2 to 9 m	**Included** • Standard bracket **Sold separately** • Side flat bracket • Free location bracket • Space-saving mounting bracket	**Connector** 	Control unit (Cannot be used as a muting system in the controller connection) Laser pointer Dedicated external indicator set Spatter protection cover SD Manager Protective bar Environment-resistant case Simple wiring connector See **p.66** for details.
	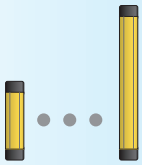 25-mm dia. 185 to 2,065 mm (8 to 102 beams) * ENVIRONMENT RESISTANT type Protective height: 225 to 1,985 mm Operating range: 0.2 to 6 m	**Detection capability** 25-mm dia. **Beam gap** 20 mm **Operating range** 0.2 to 7 m * The F3SJ-B□□□□P25-01TS/-02TS has different specifications. See **page 30** for details.	**Sold separately** • Top/bottom bracket • One-touch bracket • Compatible bracket	**Connector** 	Control unit (Cannot be used as a muting system in the controller connection) Laser pointer Spatter protection cover Protective bar Simple wiring connector See **p.30** for details.
	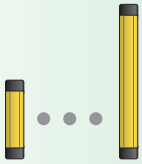 25-mm dia. 185 to 1,105 mm (8 to 54 beams)	**Detection capability** 25-mm dia. **Beam gap** 20 mm **Operating range** 0.2 to 7 m	**Sold separately** • Top/bottom bracket • One-touch bracket • Compatible bracket	**Pre-wired** 	Laser pointer Spatter protection cover Protective bar See **p.18** for details.
	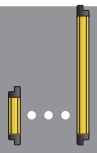 14-mm dia. 160 to 2,080 mm (15 to 207 beams) 30-mm dia. 190 to 2,510 mm (8 to 124 beams)	**Detection capability** 14-mm dia./30-mm dia. **Beam gap** 10 mm/20 mm **Operating range** 0.3 to 10 m/ 0.3 to 20 m			
	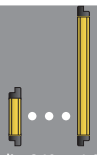 14-mm dia. 240 to 1,920 mm (23 to 191 beams) 25-mm dia. 240 to 1,920 mm (12 to 96 beams)	**Detection capability** 14-mm dia./25-mm dia. **Beam gap** 10 mm/20 mm **Operating range** 0.3 to 10 m/ 0.3 to 17 m			
	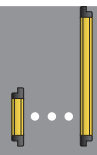 14-mm dia. 160 to 2,080 mm (15 to 207 beams) 30-mm dia. 190 to 2,510 mm (8 to 124 beams)	**Detection capability** 14-mm dia./30-mm dia. **Beam gap** 10 mm/20 mm **Operating range** 0.3 to 10 m/ 0.3 to 20 m			

Refer to the F3SG-R Series Catalog (Cat. No. F094) or visit the Omron website for details of the F3SG-R Series.

www.ia.omron.com/

F3SG-R **Search**

F3SJ-E

EASY type reduces implementation costs with 1/2 the mounting time.

- In pursuit of simple functions: Upon detection of personnel, the machine stops.
- Can be used for simple hand intrusion detection.
- Implementation costs can be significantly reduced.

Related information
Dimensions : Page 56 to 65
Function List : Page 99 to 100
Safety Precautions : Page 101
Precautions on Safety : Page 102 to 107

Ordering Information

Main Units

Safety Light Curtain

Application	Detection capability	Beam gap	Operating range	Protective height (mm)	Model	
					PNP output	NPN output
Hand protection	Dia. 25 mm	20 mm	0.2 to 7 m	185 to 1,105	F3SJ-E□□□□P25 ✻1	F3SJ-E□□□□N25

Note: F3SJ-E uses a 3 m prewired discrete cable.
✻1. For S-mark compatible model, the suffix "-S" is added to the model name.
(Example) F3SJ-E0185P25-S

Safety Light Curtain Model List

Please contact our sales representative.

F3SJ-E Series (20 mm pitch)

Model		Number of beams	Protective height [mm] ✻2
PNP output ✻1	NPN output		
F3SJ-E0185P25	F3SJ-E0185N25	8	185
F3SJ-E0225P25	F3SJ-E0225N25	10	225
F3SJ-E0305P25	F3SJ-E0305N25	14	305
F3SJ-E0385P25	F3SJ-E0385N25	18	385
F3SJ-E0465P25	F3SJ-E0465N25	22	465
F3SJ-E0545P25	F3SJ-E0545N25	26	545
F3SJ-E0625P25	F3SJ-E0625N25	30	625
F3SJ-E0705P25	F3SJ-E0705N25	34	705
F3SJ-E0785P25	F3SJ-E0785N25	38	785
F3SJ-E0865P25	F3SJ-E0865N25	42	865
F3SJ-E0945P25	F3SJ-E0945N25	46	945
F3SJ-E1025P25	F3SJ-E1025N25	50	1,025
F3SJ-E1105P25	F3SJ-E1105N25	54	1,105

✻1. For S-mark compatible model, the suffix "-S" is added to the model name.
(Example) F3SJ-E0185P25-S
✻2. Protective height (mm) = Total sensor length

Accessories (Sold separately)

Relays with Forcibly Guided Contacts

Type	Appearance	Specifications	Model	Remarks
G7SA Relays with Forcibly Guided Contacts		• Nodes: 4 • Contact type: 2A2B • Rated switch load: 250 VAC 6A, 30 VDC 6A	**G7SA-2A2B**	For details on other models or socket models, refer to the OMRON's website.
		• Nodes: 4 • Contact type: 3NO+1NC • Rated switch load: 250 VAC 6A, 30 VDC 6A	**G7SA-3A1B**	
G7S-□-E Relays with Forcibly Guided Contacts		• Nodes: 6 • Contact type: 4NO+2NC • Rated switch load: 250 VAC 10 A, 30 VDC 10 A	**G7S-4A2B-E**	For details on other models or socket models, refer to the OMRON's website.
		• Nodes: 6 • Contact type: 3NO+3NC • Rated switch load: 250 VAC 10 A, 30 VDC 10 A	**G7S-3A3B-E**	

Laser Pointer

Appearance	Output	Model
	Laser Pointer for F3SJ	**F39-PTJ**

Spatter Protection Cover (2 covers per set, one for emitter and one for receiver) (10% Operating Range Attenuation)

Appearance	Model
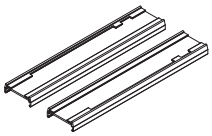	**F39-HB□□□□ ✻**

✻ The same 4-digit numbers as the protective heights (□□□□ in the light curtain model names) are substituted by in the model names.

Protective Bar

Appearance	Model	Remarks
	F39-PB□□□□ ✻1	• 2 Light Curtain brackets • 4 mounting brackets • 0 to 4 intermediate brackets for backside mounting (quantity required for the sensing width) • 0 to 4 intermediate brackets for mounting to the sides (quantity required for the sensing width)
	F39-PB□□□□-S ✻1 ✻2	• 1 Light Curtain bracket • 2 mounting brackets • 0 to 2 intermediate brackets for backside mounting (quantity required for the sensing width) • 0 to 2 intermediate brackets for mounting to the sides (quantity required for the sensing width)

Note: The following are not provided with the Protective Bars.
- Safety Light Curtain
- Safety Light Curtain Top/Bottom Brackets
- Wall Mounting Screw Unit

✻1. The same four digits indicating protective height that are used in the Sensor model number (□□□□) are used in the part of the Protector model number.

✻2. Purchase the F39-PB□□□□ (which contains two sets of brackets) to use Protective Bars for both the Emitter and Receiver.

Test rod (Sold separately)

Diameter	Model
14mm dia.	**F39-TRD14**
20mm dia.	**F39-TRD20**
25mm dia.	**F39-TRD25**
30mm dia.	**F39-TRD30**

Mirrors (12% Operating Range Attenuation)

Appearance	Mirror material	Width (mm)	Thickness (mm)	Length (mm)	Model	Remarks
	Glass mirror	145	32	406	**F39-MLG0406**	2 sets of cylinder mounting brackets and 4 screws are included.
				610	**F39-MLG0610**	
				711	**F39-MLG0711**	
				914	**F39-MLG0914**	
				1,067	**F39-MLG1067**	
				1,219	**F39-MLG1219**	
				1,422	**F39-MLG1422**	
				1,626	**F39-MLG1626**	
				1,830	**F39-MLG1830**	
				2,134	**F39-MLG2134**	

Sensor Mounting Bracket (Sold separately)

Appearance	Specifications	Model	Application	Remarks
	Top/bottom bracket	**F39-LJB1**	Top/bottom bracket for F3SJ-E/B	2 for an emitter, 2 for a receiver, total of 4 per set
	Intermediate bracket	**F39-LJB2 ✻1 ✻2**	In combination use with top/bottom bracket for F3SJ-E/B Can be used as free-location bracket.	1 set with 2 pieces
	One-touch bracket	**F39-LJB3-M6 ✻1**	One-touch bracket for F3SJ-E/B Supports M6 slide nut for aluminum frame.	1 set with 2 pieces
		F39-LJB3-M8 ✻2	One-touch bracket for F3SJ-E/B Supports M8 slide nut for aluminum frame.	
	One-touch M6 bracket One-touch M8 bracket	**F39-LJB3-M6K ✻1**	Bracket to mount an intermediate bracket to the aluminum frame with a single touch.	Hexagon socket head cap screws (M6 x 10) are included.
		F39-LJB3-M8K ✻2		Hexagon socket head cap screws (M8 x 14) are included.
	Compatible mounting bracket	**F39-LJB4**	Mounting bracket used when replacing existing area sensors (F3SJ-A or F3SN) with the F3SJ-E/B.	2 for an emitter, 2 for a receiver, total of 4 per set
	Contact mount bracket	**F39-LJB5**	Bracket to closely contact the back side of the Sensor.	2 for an emitter, 2 for a receiver, total of 4 per set

Note: All the sensor mounting brackets for F3SJ-E are sold separately.
✻1. Combining F39-LJB2 and F39-LJB3-M6K makes F39-LJB3-M6.
✻2. Combining F39-LJB2 and F39-LJB3-M8K makes F39-LJB3-M8.

Specifications (For details, refer to the instruction manual or User's manual.)

Main Units

F3SJ-E□□□□P25/N25

Model		F3SJ-E□□□□P25
		F3SJ-E□□□□N25
Sensor type		Type 4 safety light curtain
Setting tool connection ✻1		Parameter settings: Not available
Safety category		Safety purpose of category 4, 3, 2, 1, or B
Detection capability		Opaque objects 25 mm in diameter
Beam gap (P)		20 mm
Number of beams (n)		8 to 54
Protective height (PH)		185 to 1,105 mm
Lens diameter		Diameter 5 mm
Operating range ✻2		0.2 to 7 m
Response time (under stable light incident condition)	ON to OFF	15 ms max.
	OFF to ON	70 ms max.
Startup waiting time		2 s max.
Power supply voltage (Vs)		SELV/PELV 24 VDC±20% (ripple p-p 10% max.)
Consumption current (no load)	PNP output	Emitter : Up to 22 beams: 41 mA max., 26 to 42 beams: 57 mA max., 46 to 54 beams: 63 mA max. Receiver : Up to 22 beams: 42 mA max., 26 to 42 beams: 47 mA max., 46 to 54 beams: 51 mA max.
	NPN output	Emitter : Up to 22 beams: 41 mA max., 26 to 42 beams: 57 mA max., 46 to 54 beams: 63 mA max. Receiver : Up to 22 beams: 40 mA max., 26 to 42 beams: 45 mA max., 46 to 54 beams: 48 mA max.
Light source (emitted wavelength)		Infrared LED (870 nm)
Effective aperture angle (EAA)		Based on IEC 61496-2. Within ±2.5° for both emitter and receiver when the detection distance is 3 m or over
Safety outputs (OSSD)	PNP output	Two PNP transistor outputs, load current 200 mA max., residual voltage 2 V max. (except for voltage drop due to cable extension), Leakage current 1 mA max., load inductance 2.2 H max. ✻3, Maximum capacity load 1 µF ✻4
	NPN output	Two NPN transistor outputs, load current 200 mA max., residual voltage 2 V max. (except for voltage drop due to cable extension), Leakage current 1 mA max., load inductance 2.2 H max. ✻3, Maximum capacity load 1 µF ✻4
Output operation mode		Safety output: On when receiving light
Input voltage	PNP output	Test input: ON voltage: Vs-3 V to Vs (short circuit current: approx. 3.0 mA) ✻5 OFF voltage: 0 V to 1/2 Vs or open (short circuit current: approx. 4.0 mA) ✻5
	NPN output	Test input: ON voltage: 0 to 3 V (short circuit current: approx. 4.0 mA) OFF voltage: 1/2 Vs to Vs or open (short circuit current: approx. 3.0 mA) ✻5
Mutual interference prevention function		Mutual interference prevention algorithm prevents interference in up to 3 sets.
Test function		• Self test (at power-ON and at power distribution) • External test (emission stop function by test input)
Protection circuit		Output short-circuit protection, and power supply reverse polarity protection
Ambient temperature		Operating: -10 to 55°C (non-freezing), Storage: -25 to 70°C
Ambient humidity		Operating: 35% to 85% (no condensation), Storage: 35% to 95% RH
Operating ambient light intensity		Incandescent lamp: 3,000 lx max., Sunlight: 10,000 lx max.
Insulation resistance		20 MΩ min. (at 500 VDC)
Dielectric strength		1,000 VAC 50/60 Hz, 1 min
Degree of protection		IP65 (IEC 60529)
Vibration resistance		Malfunction: 10 to 55 Hz, Multiple amplitude of 0.7 mm, 20 sweeps in X, Y, and Z directions
Shock resistance		Malfunction: 100 m/s^2, 1,000 times each in X, Y, and Z directions
Pollution degree		Pollution degree 3 (IEC 60664-1)
Power cable		Connection method: Pull-out type, cable length 3 m Number of wires: Emitter: 5 wires, receiver: 6 wires Cable diameter: Dia. 6 mm Allowable bending radius: R5 mm
Extension cable		30 m max. ✻6
Material		Case: Aluminum Cap: ABS resin, PBT Optical cover: PMMA resin (acrylic) Cable: Oil resistant PVC
Net Weight ✻7		Weight (g) = (protective height) x 1.59 + 330
Gross Weight ✻8		Weight (g) = (protective height) x 2.6 + 800
Accessories		Instruction Manual, Quick Installation Manual (QIM) ✻9
Applicable standards		IEC 61496-1, EN 61496-1, UL 61496-1, Type 4 ESPE (Electro-Sensitive Protective Equipment) IEC 61496-2, EN 61496-2, UL 61496-2, Type 4 AOPD (Active Opto-electronic Protective Devices) IEC 61508-1 to -3, EN 61508-1 to -3 SIL3 ISO 13849-1: 2015, EN ISO 13849-1: 2015 (PLe/Safety Category 4) UL 508, UL 1998, CAN/CSA C22.2 No.14, CAN/CSA C22.2 No.0.8

✻1. Do not use the Support Software and Setting Console for F3SJ-A. Operation cannot be guaranteed.
✻2. Use of the Spatter Protection Cover causes a 10% maximum sensing distance attenuation.
✻3. The load inductance is the maximum value when the safety output frequently repeats ON and OFF. When you use the safety output at 4 Hz or less, the usable load inductance becomes larger.
✻4. These values must be taken into consideration when connecting elements including a capacitive load such as capacitor.
✻5. The Vs indicates a voltage value in your environment.
✻6. To extend a cable of the F3SJ-E, refer to the User's Manual (SCHG-733/732).
✻7. The net weight is the weight of an emitter and a receiver.
✻8. The gross weight is the weight of an emitter, a receiver, included accessories and a package.
✻9. Mounting brackets and test rod are sold separately.

Indicator

Emitter

Name of indicator	Label	ON	Blinking
Top-beam-state indicator	TOP	Turns ON when the top beam is receiving light.	---
Stable-state indicator	STB	Turns ON when incidence level is more than 170% of the output ON threshold.	Blinks when the safety output is turned OFF due to disturbance light or vibration.
ON/OFF-state indicator	ON OFF	Green: Turns ON when safety output is ON. Red: Turns OFF when safety output is OFF.	Red: Blinks when the F3SJ-E enters a lockout due to a safety output error.
Lockout indicator	LOCKOUT	Turns ON when the F3SJ-E enters a lockout on the receiver.	Blinks when the F3SJ-E enters a lockout on the emitter.
Power indicator	POWER	Turns ON while the power of the emitter is ON.	Blinks when the F3SJ-E enters a lockout due to power voltage/noise.
Test indicator	TEST	---	Blinks when external test is being performed.
Bottom-beam-state indicator	BTM	Turns ON when the bottom beam is receiving light.	---

Receiver

Name of indicator	Label	ON	Blinking
Top-beam-state indicator	TOP	Turns ON when the top beam is receiving light.	---
Stable-state indicator	STB	Turns ON when incidence level is more than 170% of the output ON threshold.	Blinks when the safety output is turned OFF due to disturbance light or vibration.
ON/OFF-state indicator	ON OFF	Green: Turns ON when safety output is ON. Red: Turns OFF when safety output is OFF.	Red: Blinks when the F3SJ-E enters a lockout due to a safety output error.
Lockout indicator	LOCKOUT	Turns ON when the F3SJ-E enters a lockout on the emitter.	Blinks when the F3SJ-E enters a lockout on the receiver.
Communication indicator	COM	Turns ON when communication between emitter and receiver is established.	Blinks when the F3SJ-E enters lockout due to a communication error between receiver and emitter.
Configuration indicator	CFG	---	Blinks when the F3SJ-E enters lockout due to a model type error between receiver and emitter.
Internal error indicator	INTERNAL	---	Blinks when the F3SJ-E enters a lockout due to an internal error.
Bottom-beam-state indicator	BTM	Turns ON when the bottom beam is receiving light.	---

Accessories

Laser Pointer

Item / Model	F39-PTJ
Applicable sensor	F3SJ Series
Power supply voltage	4.65 or 4.5 VDC
Battery	Three button batteries (SR44 or LR44)
Battery life ✻	SR44: 10 hours of continuous operation, LR44: 6 hours of continuous operation
Light source	Red semiconductor laser (wavelength: 650 nm, 1 mW max. JIS class 2, EN/IEC class 2, FDA class II)
Spot diameter (typical value)	6.5 mm at 10 m
Ambient temperature	Operating: 0 to 40°C Storage: -15 to 60°C (with no icing or condensation)
Ambient humidity	Operating and storage: 35% to 85% (with no condensation)
Material	Laser module case: aluminum Mounting bracket: aluminum and stainless
Weight	Approx. 220 g (packed)
Accessories	Laser safety standard labels (EN: 1, FDA: 3) Button batteries (SR44: 3), instruction manual

✻ Battery life varies depending on a battery used.

Connections

Basic Wiring Diagram

Minimum wiring required to check the operation of the F3SJ-E [PNP Output]

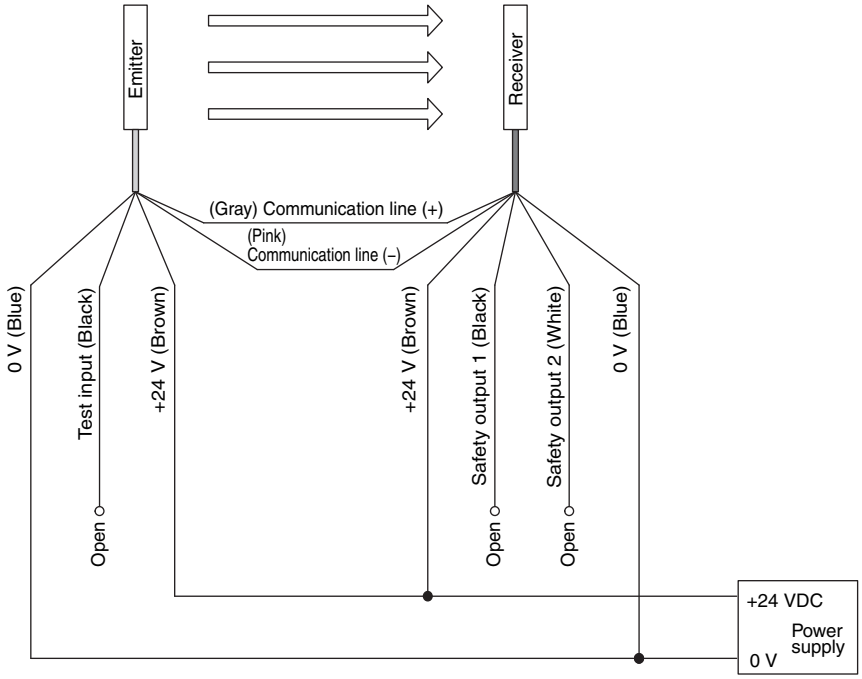

Note: This circuit diagram is used for operation check. For an actual circuit example, refer to page 25.

Minimum wiring required to check the operation of the F3SJ-E [NPN Output]

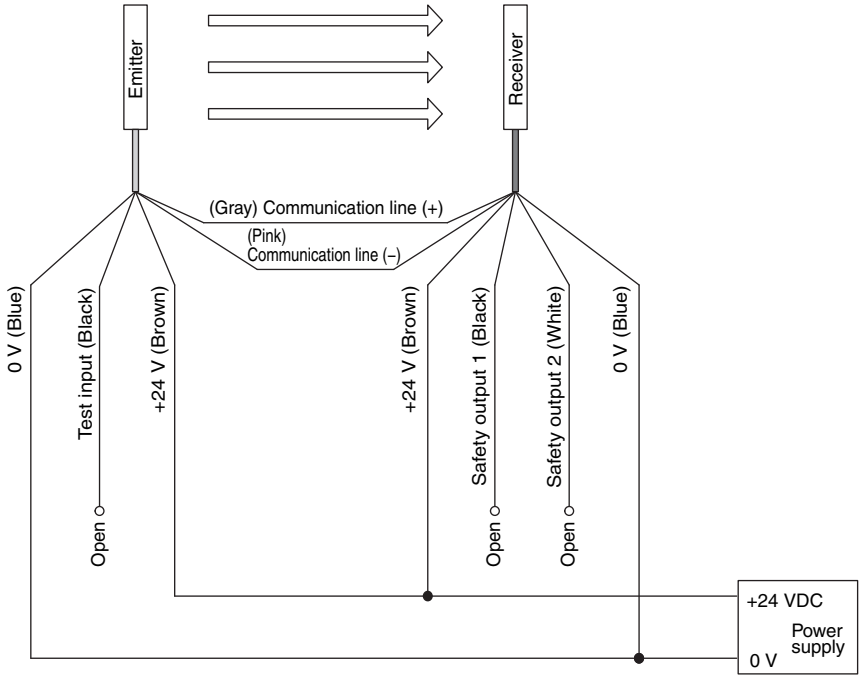

Note: This circuit diagram is used for operation check. For an actual circuit example, refer to page 25.

Input/Output Circuit Diagram

[PNP Output]

Entire Circuit Diagram

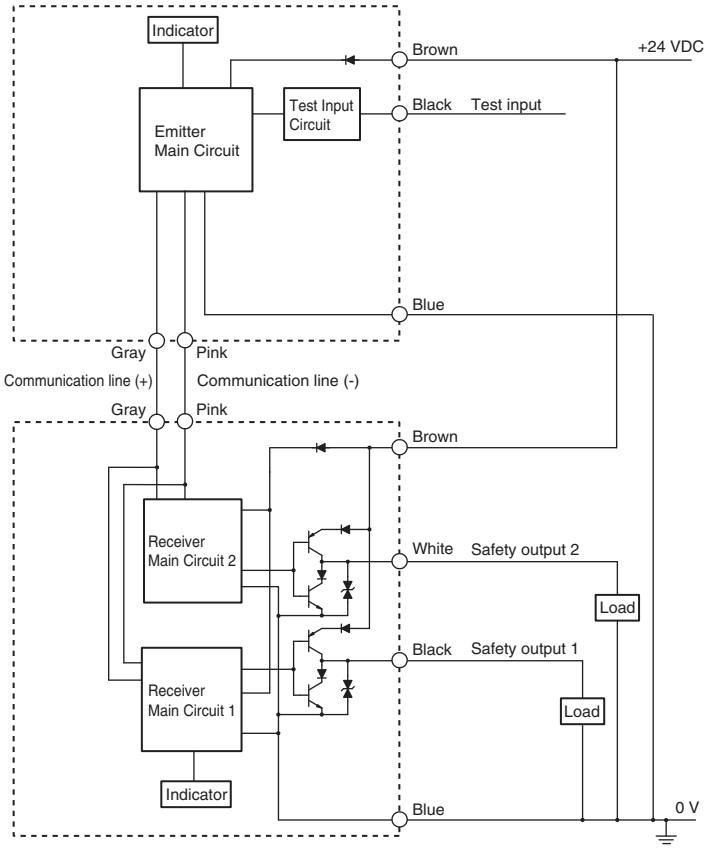

Input circuit diagram by function

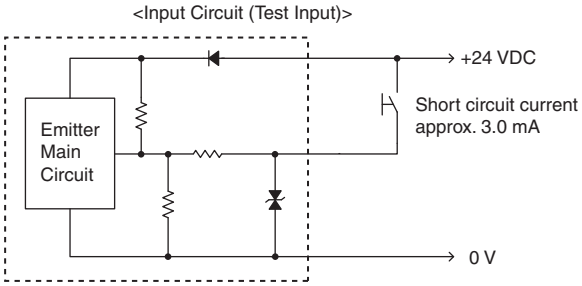

[NPN Output]

Entire Circuit Diagram

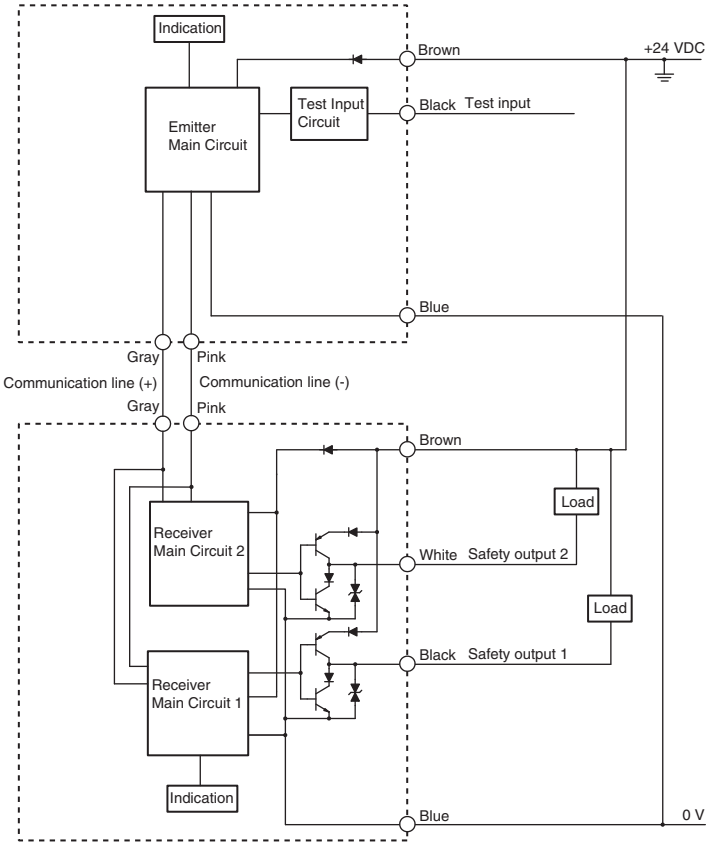

Input circuit diagram by function

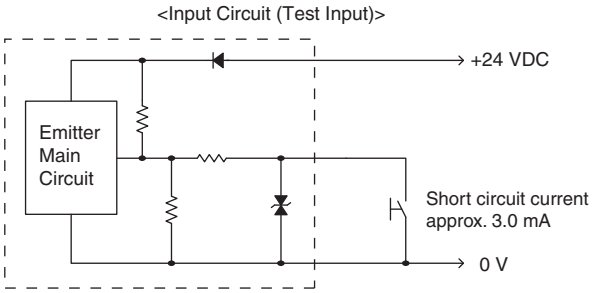

Connection Circuit Examples

Wiring for single F3SJ-E application [PNP Output]

Highest achievable PL/ safety category	Model	Stop category	Reset
PLe/4 equivalent	Safety Light Curtain F3SJ-E□□□□P25 Safety Relay G7SA	0	Manual

Note: The above PL is only the evaluation result of the example. The PL must be evaluated in an actual application by the customer after confirming the usage conditions.

● Application Overview

- The power supply to the motor M is turned OFF when the beam is blocked.
- The power supply to the motor M is kept OFF until the beams are unblocked and the reset switch S2 is pressed.

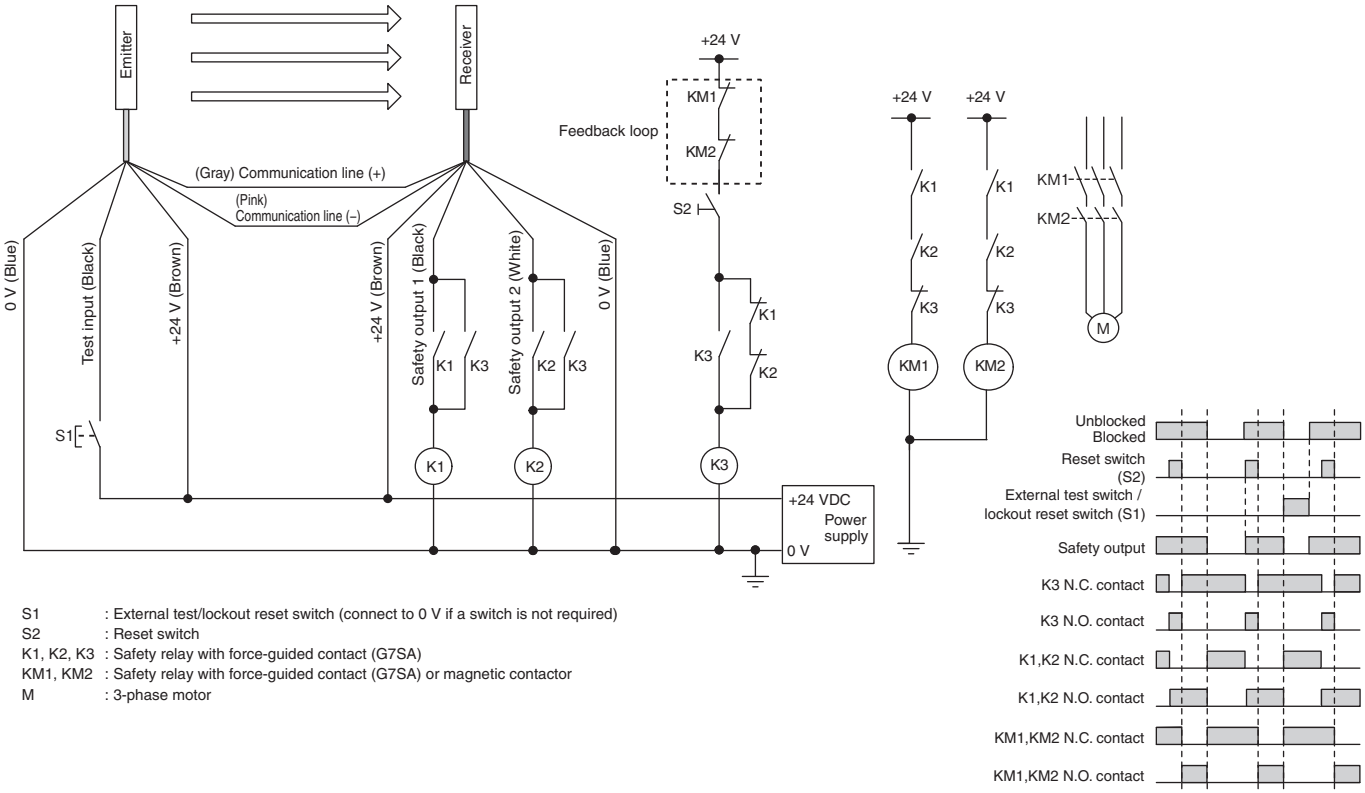

S1 : External test/lockout reset switch (connect to 0 V if a switch is not required)
S2 : Reset switch
K1, K2, K3 : Safety relay with force-guided contact (G7SA)
KM1, KM2 : Safety relay with force-guided contact (G7SA) or magnetic contactor
M : 3-phase motor

Wiring for single F3SJ-E application [NPN Output]

Highest achievable PL/ safety category	Model	Stop category	Reset
PLe/4 equivalent	Safety Light Curtain F3SJ-E□□□□N25 Safety Relay G7SA	0	Manual

Note: The above PL is only the evaluation result of the example. The PL must be evaluated in an actual application by the customer after confirming the usage conditions.

● **Application Overview**

- The power supply to the motor M is turned OFF when the beam is blocked.
- The power supply to the motor M is kept OFF until the beams are unblocked and the reset switch S2 is pressed.

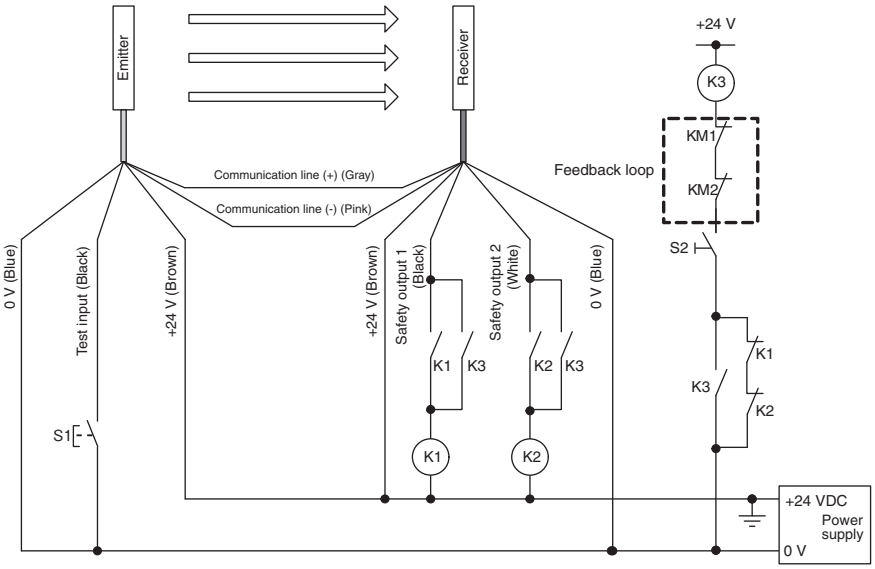

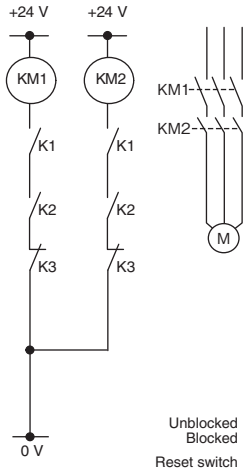

S1 : External test/lockout reset switch (connect to 24 V if a switch is not required)
S2 : Reset switch
K1, K2, K3 : Safety relay with force-guided contact (G7SA)
KM1, KM2 : Safety relay with force-guided contact (G7SA) or magnetic contactor
M : 3-phase motor

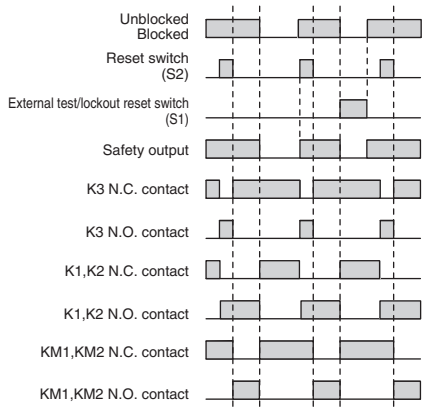

Wiring to connect a F3SJ-E with a controller G9SP [PNP Output]

Highest achievable PL/ safety category	Model	Stop category	Reset
PLe/4 equivalent	Safety Light Curtain F3SJ-E□□□□P25 Safety Controller G9SP Safety Relay G7SA Emergency Stop Switch A165E/A22E	0	Manual

Note: The above PL is only the evaluation result of the example. The PL must be evaluated in an actual application by the customer after confirming the usage conditions.

● Application Overview

- The power supply to the motor M is turned OFF when the beam is blocked.
- The power supply to the motor M is turned OFF when the emergency stop switch is pressed.
- The power supply to the motor M is kept OFF until the beams are unblocked and the reset switch S2 is pressed while the emergency stop switch is released.

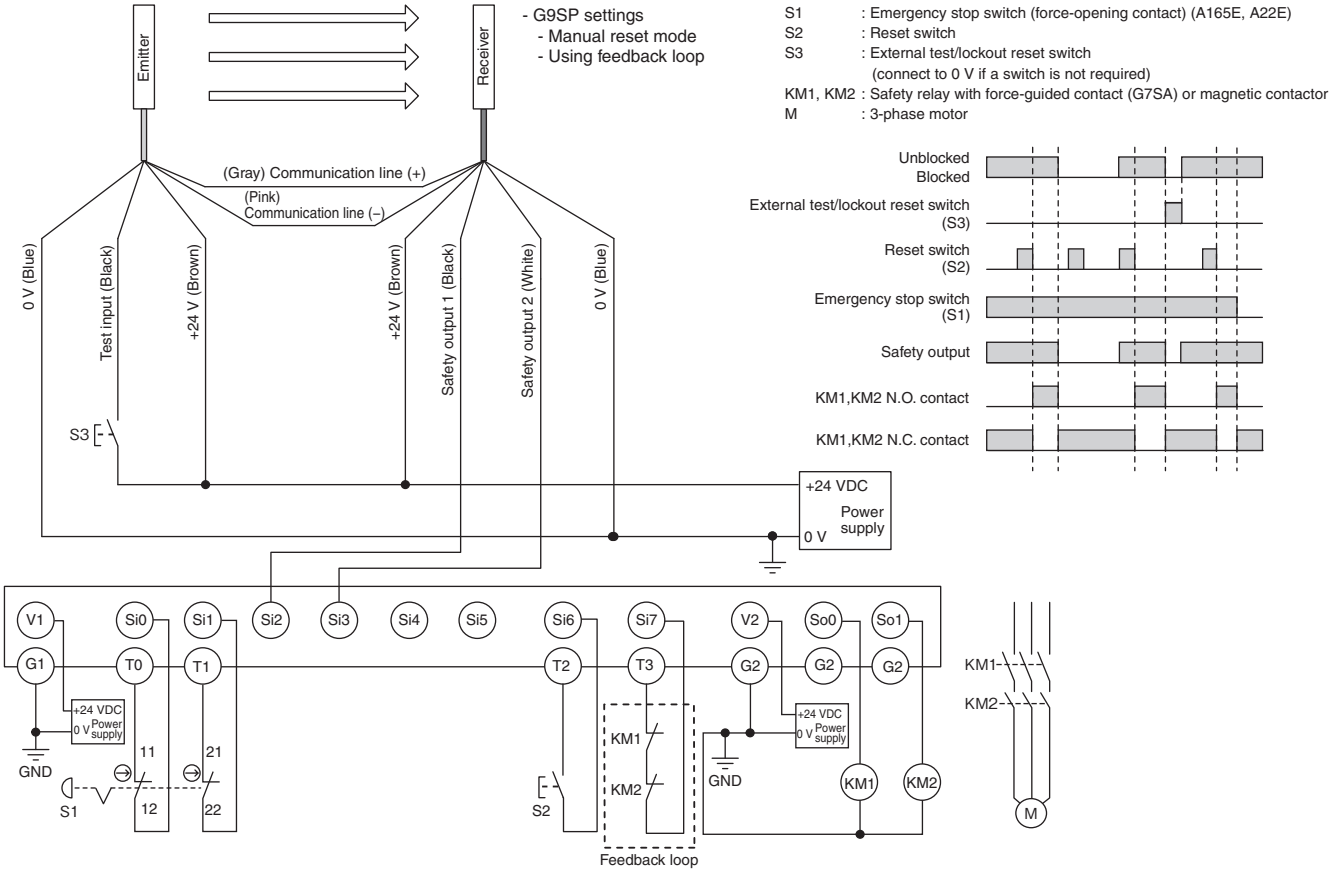

Wiring to connect a F3SJ-E with a controller G9SA-301 [PNP Output]

Highest achievable PL/ safety category	Model	Stop category	Reset
PLe/4 equivalent	Safety Light Curtain F3SJ-E□□□□P25 Safety Relay Unit G9SA-301 24V AC/DC Safety Relay G7SA Emergency Stop Switch A165E/A22E	0	Manual

Note: The above PL is only the evaluation result of the example. The PL must be evaluated in an actual application by the customer after confirming the usage conditions.

● **Application Overview**

- The power supply to the motor M is turned OFF when the beam is blocked.
- The power supply to the motor M is turned OFF when the emergency stop switch is pressed.
- The power supply to the motor M is kept OFF until the beams are unblocked and the reset switch S2 is pressed while the emergency stop switch is released.

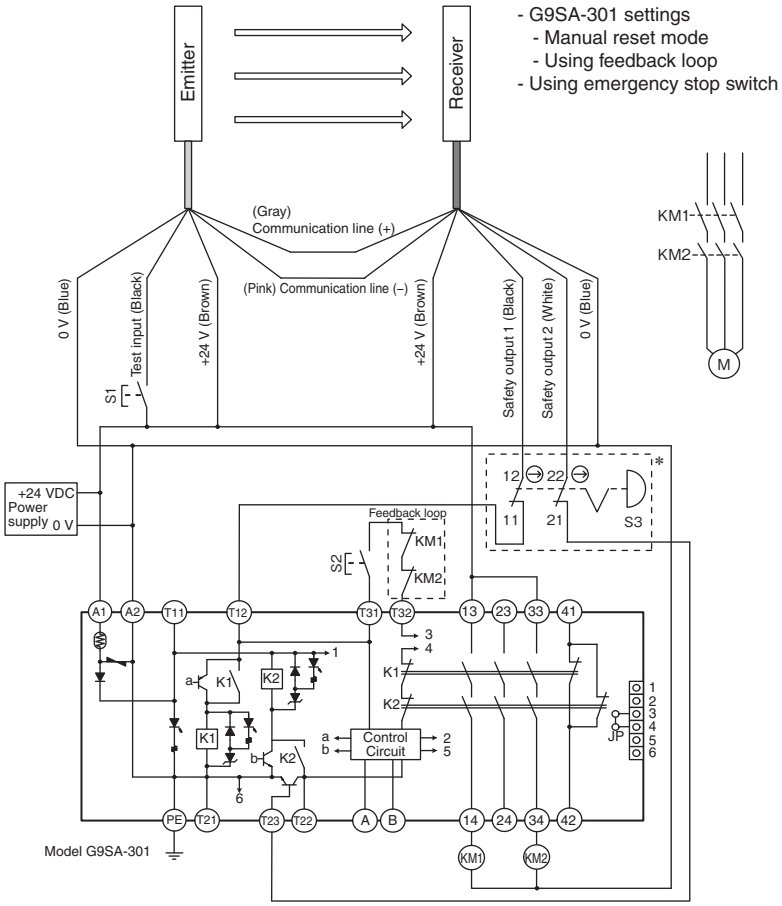

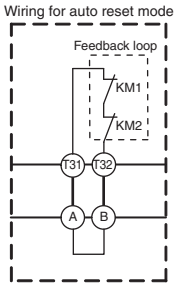

* If an emergency stop switch is not used, connect safety output 1 to T12 terminal and safety output 2 to T23 directly.

S1: External test/lockout reset switch (connect to 0 V if a switch is not required)
S2: Interlock reset switch
S3: Emergency stop switch (force-opening contact) (A165E, A22E)
KM1,KM2: Safety relay with force-guided contact (G7SA) or magnetic contactor
M: 3-phase motor

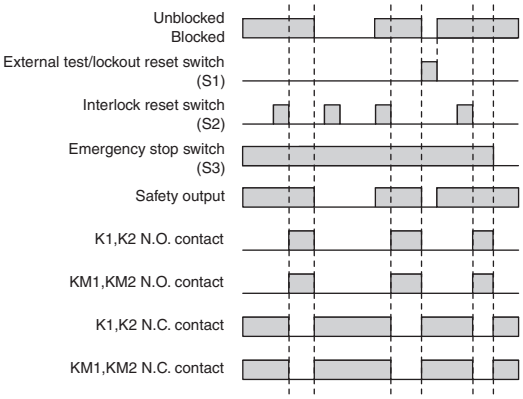

Wiring to connect a F3SJ-E with a controller G9SA-301-P [NPN Output]

Highest achievable PL/ safety category	Model	Stop category	Reset
PLe/4 equivalent	Safety Light Curtain F3SJ-E□□□□N25 Safety Relay Unit G9SA-301-P 24V DC Safety Relay G7SA Emergency Stop Switch A165E/A22E	0	Manual

Note: The above PL is only the evaluation result of the example. The PL must be evaluated in an actual application by the customer after confirming the usage conditions.

● Application Overview

- The power supply to the motor M is turned OFF when the beam is blocked.
- The power supply to the motor M is turned OFF when the emergency stop switch is pressed.
- The power supply to the motor M is kept OFF until the beams are unblocked and the reset switch S2 is pressed while the emergency stop switch is released.

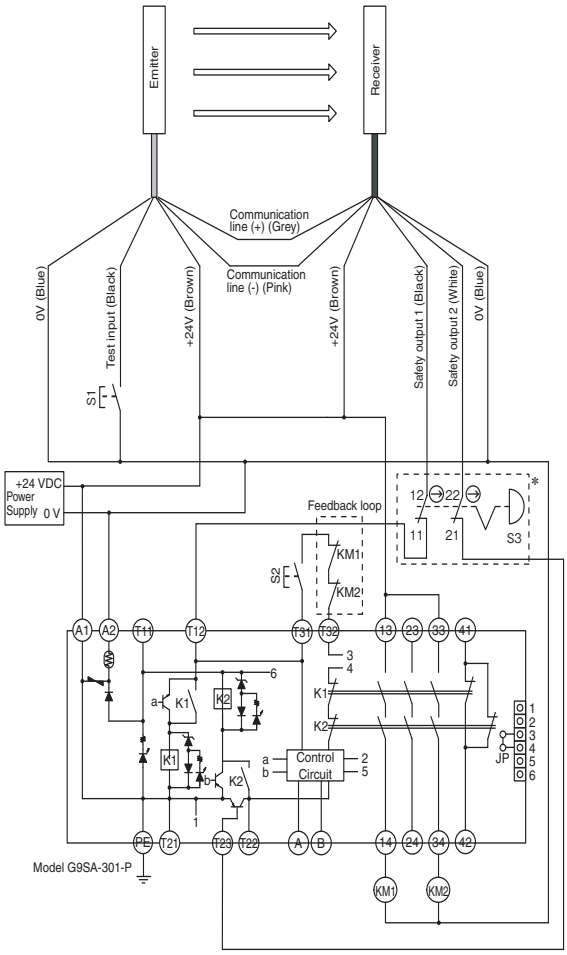

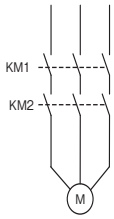

* If an emergency stop switch is not used, connect safety output 1 to T12 terminal and safety output 2 to T23 directly.

S1 : External test/ lockout reset switch
(connect to 24 V if a switch is not required)
S2 : Interlock reset switch
S3 : Emergency stop switch (force-opening contact) (A165E, A22E)
KM1, KM2 : Safety relay with force-guided contact (G7SA) or magnetic contactor
M : 3-phase motor

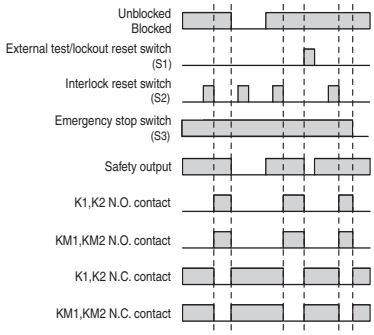

Note: 1. As the G9SP Safety Controller is a PNP output type, it cannot be connected to the F3SJ-E□□□□N25. Also, a Safety Controller with PNP output cannot be connected to the F3SJ-E□□□□N25.
2. The G9SA-301-P is a safety relay unit only for NPN output.

F3SJ-B

Basic Type with a combination of performance and functionality

- Up to three sets of series-connected sensors.
- The muting function is enabled simply with Muting Key Cap.
- Comes standard with interlock and auxiliary output functions.

Related information
Dimensions : Page 56 to 65
Function List : Page 99 to 100
Safety Precautions : Page 101
Precautions on Safety : Page 102 to 107

Ordering Information

Main Units

Safety Light Curtain

Application	Detection capability	Beam gap	Operating range	Protective height (mm)	Model	
					PNP output	NPN output
Hand protection	Dia. 25 mm	20 mm	0.2 to 7 m	185 to 2,065	F3SJ-B□□□□P25 ✻1	F3SJ-B□□□□N25
Hand protection	Dia. 25 mm	20 mm	0.2 to 7 m	185 to 2,065	F3SJ-B□□□□P25-01TS ✻2	---
Environmental resistance	Dia. 25 mm	20 mm	0.2 to 6 m	225 to 1,985	F3SJ-B□□□□P25-02TS ✻2	---

✻1. For S-mark compatible model, the suffix "-S" is added to the model name. (except for models with the suffix "-01TS" or "-02TS".)
(Example) F3SJ-E0185P25-S
✻2. The F3SJ-B series with the suffix "-01TS" or "02TS" have different functions. Refer to page 37 for details.

Safety Light Curtain Model List

Please contact our sales representative.

F3SJ-B Series (20 mm pitch)
F3SJ-B-01TS Series (20 mm pitch)
F3SJ-B-02TS Series (20 mm pitch)

Model				Number of beams	Protective height [mm] ✻
PNP output	NPN output	PNP output	PNP output		
F3SJ-B0185P25	F3SJ-B0185N25	F3SJ-B0185P25-01TS	-	8	185
F3SJ-B0225P25	F3SJ-B0225N25	F3SJ-B0225P25-01TS	F3SJ-B0225P25-02TS	10	225
F3SJ-B0305P25	F3SJ-B0305N25	F3SJ-B0305P25-01TS	F3SJ-B0305P25-02TS	14	305
F3SJ-B0385P25	F3SJ-B0385N25	F3SJ-B0385P25-01TS	F3SJ-B0385P25-02TS	18	385
F3SJ-B0465P25	F3SJ-B0465N25	F3SJ-B0465P25-01TS	F3SJ-B0465P25-02TS	22	465
F3SJ-B0545P25	F3SJ-B0545N25	F3SJ-B0545P25-01TS	F3SJ-B0545P25-02TS	26	545
F3SJ-B0625P25	F3SJ-B0625N25	F3SJ-B0625P25-01TS	F3SJ-B0625P25-02TS	30	625
F3SJ-B0705P25	F3SJ-B0705N25	F3SJ-B0705P25-01TS	F3SJ-B0705P25-02TS	34	705
F3SJ-B0785P25	F3SJ-B0785N25	F3SJ-B0785P25-01TS	F3SJ-B0785P25-02TS	38	785
F3SJ-B0865P25	F3SJ-B0865N25	F3SJ-B0865P25-01TS	F3SJ-B0865P25-02TS	42	865
F3SJ-B0945P25	F3SJ-B0945N25	F3SJ-B0945P25-01TS	F3SJ-B0945P25-02TS	46	945
F3SJ-B1025P25	F3SJ-B1025N25	F3SJ-B1025P25-01TS	F3SJ-B1025P25-02TS	50	1,025
F3SJ-B1105P25	F3SJ-B1105N25	F3SJ-B1105P25-01TS	F3SJ-B1105P25-02TS	54	1,105
F3SJ-B1185P25	F3SJ-B1185N25	F3SJ-B1185P25-01TS	F3SJ-B1185P25-02TS	58	1,185
F3SJ-B1265P25	F3SJ-B1265N25	F3SJ-B1265P25-01TS	F3SJ-B1265P25-02TS	62	1,265
F3SJ-B1345P25	F3SJ-B1345N25	F3SJ-B1345P25-01TS	F3SJ-B1345P25-02TS	66	1,345
F3SJ-B1425P25	F3SJ-B1425N25	F3SJ-B1425P25-01TS	F3SJ-B1425P25-02TS	70	1,425
F3SJ-B1505P25	F3SJ-B1505N25	F3SJ-B1505P25-01TS	F3SJ-B1505P25-02TS	74	1,505
F3SJ-B1585P25	F3SJ-B1585N25	F3SJ-B1585P25-01TS	F3SJ-B1585P25-02TS	78	1,585
F3SJ-B1665P25	F3SJ-B1665N25	F3SJ-B1665P25-01TS	F3SJ-B1665P25-02TS	82	1,665
F3SJ-B1745P25	F3SJ-B1745N25	F3SJ-B1745P25-01TS	F3SJ-B1745P25-02TS	86	1,745
F3SJ-B1825P25	F3SJ-B1825N25	F3SJ-B1825P25-01TS	F3SJ-B1825P25-02TS	90	1,825
F3SJ-B1905P25	F3SJ-B1905N25	F3SJ-B1905P25-01TS	F3SJ-B1905P25-02TS	94	1,905
F3SJ-B1985P25	F3SJ-B1985N25	F3SJ-B1985P25-01TS	F3SJ-B1985P25-02TS	98	1,985
F3SJ-B2065P25	F3SJ-B2065N25	F3SJ-B2065P25-01TS	-	102	2,065

✻ Protective height (mm) = Total sensor length
Note: 1. The models with the suffix "-01TS" or "-02TS are the PNP type only.
2. The test input logic is inverted for the models with the suffix "-01TS".
3. Reset mode is fixed with auto reset mode for the models with the suffix "-01TS" or "-02TS".

Accessories (Sold separately)

Single-Ended Cable (2 covers per set, one for emitter and one for receiver) ✻

For wiring with safety circuit such as single safety relay, safety relay unit, and safety controller

Appearance	Cable length	Specifications	Model
	3 m	M12 connector (8-pin)	**F39-JD3A**
	7 m		**F39-JD7A**
	10 m		**F39-JD10A**
	15 m		**F39-JD15A**
	20 m		**F39-JD20A**

✻ The cable for emitter and the cable for receiver are available separately. Add '-L' for emitter or '-D' for receiver to the end of the model number when you order.
Single-Ended Cable for Emitter: F39-JD□A-L, Single-Ended Cable for Receiver: F39-JD□A-D

Note: To extend the cable length to 20 m or more, add the F39-JD□B Double-Ended Cable.
Example: When using a cable of 30 m, connect the F39-JD10A Single-Ended Cable with the F39-JD20B Double-Ended Cable.

Double-Ended Cable (2 covers per set, one for emitter and one for receiver) ✻

Control unit for connection with F3SP-B1P, to extend the length under series connection

Appearance	Cable length	Specifications	Model
	0.5 m	M12 connector (8-pin)	**F39-JDR5B**
	1 m		**F39-JD1B**
	3 m		**F39-JD3B**
	5 m		**F39-JD5B**
	7 m		**F39-JD7B**
	10 m		**F39-JD10B**
	15 m		**F39-JD15B**
	20 m		**F39-JD20B**

✻ The cable for emitter and the cable for receiver are available separately. Add '-L' for emitter or '-D' for receiver to the end of the model number when you order.
Double-Ended Cable for Emitter: F39-JD□B-L, Double-Ended Cable for Receiver: F39-JD□B-D

Note: To extend the cable length to 20 m or more, use the Double-Ended Cables in combination.
Example: When using a cable of 30 m, connect the F39-JD10B Double-Ended Cable with the F39-JD20B Double-Ended Cable.

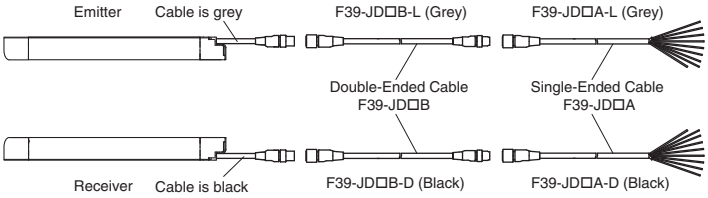

Series-connection Cable (2 covers per set, one for emitter and one for receiver)

Type	Appearance	Cable length	Model	Application
Series connection cable for extension		0.2 m	**F39-JBR2W ✻**	For series connection

✻ This product is for F3SJ-B only.

Note: The Double-Ended Cable (up to 7 m: F39-JD7B) can be added to extend the cable length between the series-connected sensors.
Cable length between sensors: 7 m max. (not including series connection cable (F39-JBR2W) and power cable)

<Connection example>

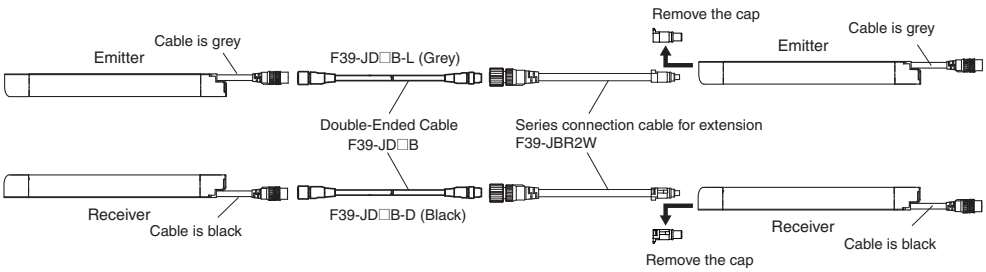

Simple wiring connector system
(Order the F39-CN5 and Cables for Simple Wiring.)

Simple wiring connector

Appearance	Model	Application
	F39-CN5	To reduce wiring

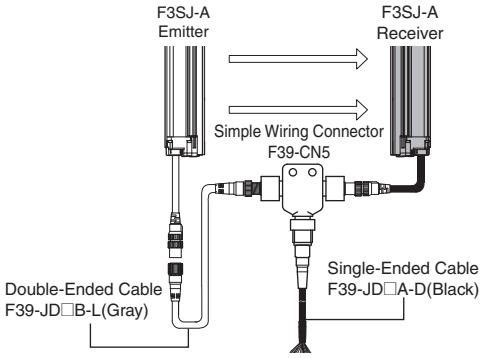

Cable for simple wiring ✻ (2 cables per set, one double-ended cable and one single-ended cable)

Appearance	Contents		Cable length	Model
	Double-Ended Cable	F39-JD3B-L	3 m	**F39-JD0303BA**
	Single-Ended Cable	F39-JD3A-D	3 m	
	Double-Ended Cable	F39-JD3B-L	3 m	**F39-JD0307BA**
	Single-Ended Cable	F39-JD7A-D	7 m	
	Double-Ended Cable	F39-JD3B-L	3 m	**F39-JD0310BA**
	Single-Ended Cable	F39-JD10A-D	10 m	
	Double-Ended Cable	F39-JD5B-L	5 m	**F39-JD0503BA**
	Single-Ended Cable	F39-JD3A-D	3 m	
	Double-Ended Cable	F39-JD5B-L	5 m	**F39-JD0507BA**
	Single-Ended Cable	F39-JD7A-D	7 m	
	Double-Ended Cable	F39-JD5B-L	5 m	**F39-JD0510BA**
	Single-Ended Cable	F39-JD10A-D	10 m	
	Double-Ended Cable	F39-JD10B-L	10 m	**F39-JD1003BA**
	Single-Ended Cable	F39-JD3A-D	3 m	
	Double-Ended Cable	F39-JD10B-L	10 m	**F39-JD1007BA**
	Single-Ended Cable	F39-JD7A-D	7 m	
	Double-Ended Cable	F39-JD10B-L	10 m	**F39-JD1010BA**
	Single-Ended Cable	F39-JD10A-D	10 m	

Note: A double-ended cable and single-ended cable with other cable lengths than those listed above can also be used in combination.
Please contact your OMRON sales representative for details.
✻ Although the double-ended cable for the emitter is used for the emitter in the above figure, it can also be used for the receiver.

Relays with Forcibly Guided Contacts

Type	Appearance	Specifications	Model	Remarks
G7SA Relays with Forcibly Guided Contacts		• Nodes: 4 • Contact type: 2NO+2NC • Rated switch load: 250 VAC 6A, 30 VDC 6A	**G7SA-2A2B**	For details on other models or socket models, refer to the OMRON's website.
		• Nodes: 4 • Contact type: 3NO+1NC • Rated switch load: 250 VAC 6A, 30 VDC 6A	**G7SA-3A1B**	
G7S-□-E Relays with Forcibly Guided Contacts		• Nodes: 6 • Contact type: 4NO+2NC • Rated switch load: 250 VAC 10 A, 30 VDC 10 A	**G7S-4A2B-E**	For details on other models or socket models, refer to the OMRON's website.
		• Nodes: 6 • Contact type: 3NO+3NC • Rated switch load: 250 VAC 10 A, 30 VDC 10 A	**G7S-3A3B-E**	

Test rod (Sold separately)

Diameter	Model
14mm dia.	**F39-TRD14**
20mm dia.	**F39-TRD20**
25mm dia.	**F39-TRD25**
30mm dia.	**F39-TRD30**

Control Unit (Can not be used as a muting system)

(Dedicated PNP output type)

Appearance	Output	Model	Remarks
	Relay, 3NO+1NC	**F3SP-B1P ✻**	For connection with F3SJ-B, use a double-ended cable F39-JD□B.

✻ F3SJ for NPN output type cannot be connected.

Wire-saving Devices

Type	Appearance	Specifications	Model	Remarks
Connector Terminal Box/ Muting Terminals ✻2		Model with PNP Muting Sensor Output	**F39-TC5P01**	Significantly reduces amount of wiring between Safety Light Curtains and Muting Sensors. IP67 model for mounting at Sensor installation site. For details, refer to the OMRON's website.
		Model with PNP Override Input	**F39-TC5P02**	
		Model with NPN Muting Sensor Output	**F39-TC5N01**	
		Model with NPN Override Input	**F39-TC5N02**	
Safety Terminal Relays ✻2	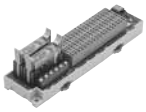	PNP output relay, SPDT-NO	**F3SP-T01 ✻1**	Significantly reduces amount of wiring between Safety Light Curtains and Muting Sensors. For details, refer to the OMRON's website.

✻1. F3SJ for NPN output type cannot be connected.
✻2. The models with the suffix "-01TS" cannot be connected.

Laser Pointer

Appearance	Output	Model
	Laser Pointer for F3SJ	**F39-PTJ ✻**

✻ It cannot be mounted to the models with the suffix "-02TS".

Spatter Protection Cover (2 covers per set, one for emitter and one for receiver) (10% Operating Range Attenuation)

Appearance	Model
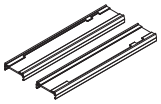	**F39-HB□□□□ ✻1 ✻2**

✻1. The same 4-digit numbers as the protective heights (□□□□ in the light curtain model names) are substituted by in the model names.
✻2. It cannot be mounted to the models with the suffix "-02TS".

Protective Bar

Appearance	Model	Remarks
	F39-PB□□□□ ✻1	• 2 Light Curtain brackets • 4 mounting brackets • 0 to 4 intermediate brackets for backside mounting (quantity required for the sensing width) • 0 to 4 intermediate brackets for mounting to the sides (quantity required for the sensing width)
	F39-PB□□□□-S ✻1 ✻2	• 1 Light Curtain bracket • 2 mounting brackets • 0 to 2 intermediate brackets for backside mounting (quantity required for the sensing width) • 0 to 2 intermediate brackets for mounting to the sides (quantity required for the sensing width)

Note: The following are not provided with the Protective Bars.
•Safety Light Curtain
•Safety Light Curtain Top/Bottom Brackets
•Wall Mounting Screw Unit

✻1. The same four digits indicating protective height that are used in the Sensor model number (□□□□) are used in the part of the Protector model number.
✻2. Purchase the F39-PB□□□□ (which contains two sets of brackets) to use Protective Bars for both the Emitter and Receiver.

Mirrors (12% Operating Range Attenuation)

Appearance	Mirror material	Width (mm)	Thickness (mm)	Length (mm)	Model	Remarks
	Glass mirror	145	32	406	**F39-MLG0406**	2 sets of cylinder mounting brackets and 4 screws are included.
				610	**F39-MLG0610**	
				711	**F39-MLG0711**	
				914	**F39-MLG0914**	
				1,067	**F39-MLG1067**	
				1,219	**F39-MLG1219**	
				1,422	**F39-MLG1422**	
				1,626	**F39-MLG1626**	
				1,830	**F39-MLG1830**	
				2,134	**F39-MLG2134**	

Sensor mounting bracket (Sold separately)

Appearance	Specifications	Model	Application	Remarks
	Top/bottom bracket	**F39-LJB1**	Top/bottom bracket for F3SJ-E/B	2 for an emitter, 2 for a receiver, total of 4 per set
	Intermediate bracket	**F39-LJB2 ✻1 ✻2**	In combination use with top/bottom bracket for F3SJ-E/B Can be used as free-location bracket.	1 set with 2 pieces
	One-touch bracket	**F39-LJB3-M6 ✻1**	One-touch bracket for F3SJ-E/B Supports M6 slide nut for aluminum frame.	1 set with 2 pieces
		F39-LJB3-M8 ✻2	One-touch bracket for F3SJ-E/B Supports M8 slide nut for aluminum frame.	
	One-touch M6 bracket One-touch M8 bracket	**F39-LJB3-M6K ✻1**	Bracket to mount an intermediate bracket to the aluminum frame with a single touch.	Hexagon socket head cap screws (M6 x 10) are included.
		F39-LJB3-M8K ✻2		Hexagon socket head cap screws (M8 x 14) are included.
	Compatible mounting bracket	**F39-LJB4**	Mounting bracket used when replacing existing area sensors (F3SJ-A or F3SN) with the F3SJ-E/B.	2 for an emitter, 2 for a receiver, total of 4 per set
	Contact mount bracket	**F39-LJB5**	Bracket to closely contact the back side of the Sensor.	2 for an emitter, 2 for a receiver, total of 4 per set

✻1. Combining F39-LJB2 and F39-LJB3-M6K makes F39-LJB3-M6.
✻2. Combining F39-LJB2 and F39-LJB3-M8K makes F39-LJB3-M8.

End Cap

Appearance	Model	Remarks
	F39-CN11 ✻	For both emitter and receiver. The End Cap can be purchased if lost. (Case: Black)

✻ This product is for F3SJ-B only.

Key Cap for Muting

Appearance	Model	Remarks
	F39-CN10 **✻1 ✻2**	A cap to be attached to the main unit to enable muting function. Attach it to either an emitter or a receiver. (Case: orange)

✻1. This product is for F3SJ-B only.
✻2. The models with the suffix "-01TS" cannot be connected.

Specifications (For details, refer to the instruction manual or User's manual.)

Main Units

F3SJ-B□□□□P25/N25

Model		PNP output	F3SJ-B□□□□P25
		NPN output	F3SJ-B□□□□N25
Sensor type			Type 4 safety light curtain
Setting tool connection ✻1			Parameter settings: Not available
Safety category			Safety purpose of category 4, 3, 2, 1, or B
Detection capability			Opaque objects 25mm in diameter
Beam gap (P)			20 mm
Number of beams (n)			8 to 102
Protective height (PH)			185 to 2,065 mm
Lens diameter			Diameter 5 mm
Operating range ✻2			0.2 to 7 m
Response time (under stable light incident condition)	ON to OFF		15 ms max. (response time at 1 set connection, series connection of 2 sets or 3 sets)
	OFF to ON		70 ms max. (response time at 1 set connection, series connection of 2 sets or 3 sets)
Startup waiting time			2 s max.
Power supply voltage (Vs)			SELV/PELV 24 VDC±20% (ripple p-p 10% max.)
Consumption current (no load)	PNP output		Emitter : Up to 22 beams: 52 mA max., 26 to 42 beams: 68 mA max., 46 to 62 beams: 75 mA max., 66 to 82 beams: 88 mA max., 86 to 102 beams: 101 mA max. Receiver : Up to 22 beams: 45 mA max., 26 to 42 beams: 50 mA max., 46 to 62 beams: 56 mA max., 66 to 82 beams: 61 mA max., 86 to 102 beams: 67 mA max.
	NPN output		Emitter : Up to 22 beams: 52 mA max., 26 to 42 beams: 68 mA max., 46 to 62 beams: 75 mA max., 66 to 82 beams: 88 mA max., 86 to 102 beams: 101 mA max. Receiver : Up to 22 beams: 47 mA max., 26 to 42 beams: 52 mA max., 46 to 62 beams: 58 mA max., 66 to 82 beams: 63 mA max., 86 to 102 beams: 69 mA max.
Light source (emitted wavelength)			Infrared LED (870 nm)
Effective aperture angle (EAA)			Based on IEC 61496-2.Within +/-2.5° for both emitter and receiver when the detection distance is 3 m or over
Safety outputs (OSSD)	PNP output		Two PNP transistor outputs, load current 200 mA max., residual voltage 2 V max. (except for voltage drop due to cable extension), Leakage current 1 mA max., load inductance 2.2 H max. ✻3, Maximum capacity load 1 μF ✻4
	NPN output		Two NPN transistor outputs, load current 200 mA max., residual voltage 2 V max. (except for voltage drop due to cable extension), Leakage current 1 mA max., load inductance 2.2 H max. ✻3, Maximum capacity load 1 μF ✻4
Auxiliary output	PNP output		One PNP transistor outputs, load current 100 mA max., residual voltage 2 V max. (except for voltage drop due to cable extension), leak current 1 mA max.
	NPN output		One NPN transistor outputs, load current 100 mA max., residual voltage 2 V max. (except for voltage drop due to cable extension), leak current 1 mA max.
Output operation mode			Safety output: On when receiving light Auxiliary output: - Reverse output of safety output for a basic system - ON when muting/override for a muting system
Input voltage	PNP output		Test input, Interlock select input, Reset input, Muting input: ON voltage: Vs-3 V to Vs (short circuit current: approx. 3.0 mA) ✻5, OFF voltage: 0 V to 1/2 Vs or open (short circuit current: approx. 4.0 mA) ✻5 External device monitoring input: ON voltage: Vs-3 V to Vs (short circuit current: approx. 6.0 mA) ✻5, OFF voltage: open
	NPN output		Test input, Interlock select input, Reset input, Muting input: ON voltage: 0 to 3 V (short circuit current: approx. 4.0 mA), OFF voltage:1/2 Vs to Vs or open (short circuit current: approx. 3.0 mA) ✻5 External device monitoring input: ON voltage: 0 to 3 V (short circuit current: approx. 5.5 mA) ✻5, OFF voltage: open
Mutual interference prevention function			Mutual interference prevention algorithm prevents interference in up to 3 sets.
Series connection			Time division emission by series connection • Number of connections: up to 3 sets (between F3SJ-Bs only)Other models cannot be connected. • Total number of beams: up to 192 beams • Cable length between sensors: 7 m max. (not including series connection cable (F39-JBR2W) and power cable)
Test function			• Self test (at power-ON and at power distribution) • External test (emission stop function by test input)
Safety-related functions			• Interlock (basic system) • External device monitoring (basic system) • Muting (muting system) • Override (muting system)
Connection type			Connector method (M12, 8-pin)
Protection circuit			Output short-circuit protection, and power supply reverse polarity protection
Ambient temperature			Operating: -10 to 55°C (non-freezing), Storage: -25 to 70°C
Ambient humidity			Operating: 35% to 85% (no condensation), Storage: 35% to 95% RH
Operating ambient light intensity			Incandescent lamp: 3,000 lx max., Sunlight: 10,000 lx max.
Insulation resistance			20 MΩ min. (at 500 VDC)
Dielectric strength			1,000 VAC 50/60 Hz, 1 min
Degree of protection			IP65 (IEC 60529)
Vibration resistance			Malfunction: 10 to 55 Hz, Multiple amplitude of 0.7 mm, 20 sweeps in X, Y, and Z directions
Shock resistance			Malfunction: 100 m/s^2, 1,000 times each in X, Y, and Z directions
Pollution degree			Pollution degree 3 (IEC 60664-1)

Power cable	Connection method: Prewired connector cable, cable length 0.3 m, connector type (M12, 8-pin), connector: IP67 rated (when mated) Number of wires: 8 wires Cable diameter: Dia. 6 mm Allowable bending radius: R5 mm
Extension cable	30 m max.
Material	Case: Aluminum Cap: ABS resin, PBT Optical cover: PMMA resin (acrylic) Cable: Oil resistant PVC
Net Weight ✻6	Weight (g) = (protective height) x 1.62 + 110
Gross Weight ✻7	Weight (g) = (protective height) x 2.7 + 500
Accessories	Instruction Manual, Quick Installation Manual (QIM) **✻8**
Applicable standards	IEC 61496-1, EN 61496-1, UL 61496-1, Type 4 ESPE (Electro-Sensitive Protective Equipment) IEC 61496-2, EN 61496-2, UL 61496-2, Type 4 AOPD (Active Opto-electronic Protective Devices) IEC 61508-1 to -3, EN 61508-1 to -3 SIL3 ISO 13849-1: 2015, EN ISO 13849-1: 2015 (PLe/Safety Category 4) UL 508, UL 1998, CAN/CSA C22.2 No.14, CAN/CSA C22.2 No.0.8

✻1. Do not use the Support Software and Setting Console for F3SJ-A. Operation cannot be guaranteed.
✻2. Use of the Spatter Protection Cover causes a 10% maximum sensing distance attenuation.
✻3. The load inductance is the maximum value when the safety output frequently repeats ON and OFF. When you use the safety output at 4 Hz or less, the usable load inductance becomes larger.
✻4. These values must be taken into consideration when connecting elements including a capacitive load such as capacitor.
✻5. The Vs indicates a voltage value in your environment.
✻6. The net weight is the weight of an emitter and a receiver.
✻7. The gross weight is the weight of an emitter, a receiver, included accessories and a package.
✻8. Mounting brackets are sold separately.

Indicator (F3SJ-B□□□□P25/N25)

Emitter

Name of indicator	Label	ON	Blinking
Top-beam-state indicator	TOP	Turns ON when the top beam is receiving light.	Blinks during muting/override, or when cap error or connection error occurs.
Stable-state indicator	STB	Turns ON when incidence level is more than 170% of the output ON threshold.	Blinks when the safety output is turned OFF due to disturbance light or vibration.
ON/OFF-state indicator	ON OFF	Green: Turns ON when safety output is ON. Red: Turns OFF when safety output is OFF.	Red: Blinks when the F3SJ-B enters a lockout due to a safety output error.
Lockout indicator	LOCKOUT	Turns ON when the F3SJ-B enters a lockout on the receiver.	Blinks when the F3SJ-B enters a lockout on the emitter.
Power indicator	POWER	Turns ON while the power of the emitter is ON.	Blinks when the F3SJ-B enters a lockout due to power voltage/noise.
Test indicator	TEST	---	Blinks when external test is being performed.
Muting error indicator	MUTING ERROR	---	Blinks during a muting error.
Muting input 1 indicator	MUTE1	Turns ON when muting input 1 is ON under the muting system.	---
Muting input 2 indicator	MUTE2	Turns ON when muting input 2 is ON under the muting system.	---
Bottom-beam-state indicator	BTM	Turns ON when the bottom beam is receiving light.	Blinks during muting/override.

Receiver

Name of indicator	Label	ON	Blinking
Top-beam-state indicator	TOP	Turns ON when the top beam is receiving light.	Blinks during muting/override, or when cap error or connection error occurs.
Stable-state indicator	STB	Turns ON when incidence level is more than 170% of the output ON threshold.	Blinks when the safety output is turned OFF due to disturbance light or vibration.
ON/OFF-state indicator	ON OFF	Green: Turns ON when safety output is ON. Red: Turns OFF when safety output is OFF.	Red: Blinks when the F3SJ-B enters a lockout due to a safety output error.
Lockout indicator	LOCKOUT	Turns ON when the F3SJ-B enters a lockout on the emitter.	Blinks when the F3SJ-B enters a lockout on the receiver.
Communication indicator	COM	Turns ON when communication between emitter and receiver is established.	Blinks when the F3SJ-B enters lockout due to a communication error between receiver and emitter.
Configuration indicator	CFG	---	Blinks when the F3SJ-B enters lockout due to a model type error between receiver and emitter.
Internal error indicator	INTERNAL	---	Blinks when the F3SJ-B enters a lockout due to an internal error.
Interlock indicator	INT -LK	Turns ON when the F3SJ-B is in interlock state.	Blinks when the F3SJ-B enters a lockout due to a wiring error.
External device monitoring indicator	EDM	Turns ON when an input is given to external device monitoring input. **✻1 ✻2**	Blinks when the F3SJ-B enters a lockout due to an external device monitoring error.
Bottom-beam-state indicator	BTM	Turns ON when the bottom beam is receiving light.	Blinks during muting/override.

✻1. It turns ON when there is an external device monitoring input regardless of the availability of the external device monitoring.
✻2. The meanings of the indicators are different for the models with the suffix "-01TS". Refer to the F3SJ-B□□□□P25-01TS Safety Light Curtain User's Manual (SCHG-734) or the specifications of the models with the suffix "-01TS".

Main Units

F3SJ-B□□□□P25-01TS/-02TS

Model		F3SJ-B□□□□P25-01TS	F3SJ-B□□□□P25-02TS
Sensor type		Type 4 safety light curtain	
Setting tool connection ✻1		Parameter settings: Not available	
Safety category		Safety purpose of category 4, 3, 2, 1, or B	
Detection capability		Opaque objects 25mm in diameter	
Beam gap (P)		20 mm	
Number of beams (n)		8 to 102	10 to 98
Protective height (PH)		185 to 2,065 mm	225 to 1,985 mm
Lens diameter		Diameter 5 mm	
Operating range		0.2 to 7 m ✻2	0.2 to 6 m
Response time (under stable light incident condition)	ON to OFF	15 ms max. (response time at 1 set connection, series connection of 2 sets or 3 sets)	
	OFF to ON	70 ms max. (response time at 1 set connection, series connection of 2 sets or 3 sets)	
Startup waiting time		2 s max.	
Power supply voltage (Vs)		SELV/PELV 24 VDC±20% (ripple p-p 10% max.)	
Consumption current (no load)	Emitter	Up to 22 beams: 52 mA max., 26 to 42 beams: 68 mA max., 46 to 62 beams: 75 mA max., 66 to 82 beams: 88 mA max., 86 to 102 beams: 101 mA max.	Up to 22 beams: 52 mA max., 26 to 42 beams: 68 mA max., 46 to 62 beams: 75 mA max., 66 to 82 beams: 88 mA max., 86 to 98 beams: 99 mA max.
	Receiver	Up to 22 beams: 45 mA max., 26 to 42 beams: 50 mA max., 46 to 62 beams: 56 mA max., 66 to 82 beams: 61 mA max., 86 to 102 beams: 67 mA max.	Up to 22 beams: 45 mA max., 26 to 42 beams: 50 mA max., 46 to 62 beams: 56 mA max., 66 to 82 beams: 61 mA max., 86 to 98 beams: 66 mA max.
Light source (emitted wavelength)		Infrared LED (870 nm)	
Effective aperture angle (EAA)		Based on IEC 61496-2.Within +/-2.5° for both emitter and receiver when the detection distance is 3 m or over	
Safety outputs (OSSD)		Two PNP transistor outputs, load current 200 mA max., residual voltage 2 V max. (except for voltage drop due to cable extension), Leakage current 1 mA max., load inductance 2.2 H max. ✻3, Maximum capacity load 1 μF ✻4	
Auxiliary output		One PNP transistor outputs, load current 100 mA max., residual voltage 2 V max. (except for voltage drop due to cable extension), leak current 1 mA max.	
Output operation mode		Safety output: On when receiving light Auxiliary output: Reverse output of safety output	Safety output: On when receiving light Auxiliary output: • Basic system Reverse output of safety output • Muting system On during muting/override
Input voltage		Test input ON voltage: 0 V to 1/2 Vs or open (short circuit current: approx. 4.0 mA) ✻5 OFF voltage: Vs-3 V to Vs (short circuit current: approx. 3.0 mA) ✻5 Reset input: ON voltage: Vs-3 V to Vs (short circuit current: approx. 3.0 mA) ✻5 OFF voltage: 0 V to 1/2 Vs or open (short circuit current: approx. 4.0 mA) ✻5 External device monitoring input: ON voltage: Vs-3 V to Vs (short circuit current: approx. 6.0 mA) ✻5 OFF voltage: open	Test input, Interlock select input, Reset input, Muting input: ON voltage: Vs-3 V to Vs (short circuit current: approx. 3.0 mA) ✻5 OFF voltage: 0 V to 1/2 Vs or open (short circuit current: approx. 4.0 mA) ✻5 External device monitoring input: ON voltage: Vs-3 V to Vs (short circuit current: approx. 6.0 mA) ✻5 OFF voltage: open
Mutual interference prevention function		Mutual interference prevention algorithm prevents interference in up to 3 sets.	
Series connection		Time division emission by series connection • Number of connections: up to 3 sets (between F3SJ-B□□□□P25-01TSs only) Other models cannot be connected. • Total number of beams: up to 192 beams • Cable length between sensors: 7 m max. (not including series connection cable (F39-JBR2W) and power cable)	Time division emission by series connection • Number of connections: up to 3 sets (between F3SJ-B□□□□P25-02TSs only) Other models cannot be connected. • Total number of beams: up to 192 beams • Cable length between sensors: 7 m max. (not including series connection cable (F39-JBR2W) and power cable)
Test function		• Self test (at power-ON and at power distribution) • External test (emission stop function by test input)	
Safety-related functions		External device monitoring	External device monitoring (basic system) Muting (muting system) Override (muting system)
Connection type		Connector method (M12, 8-pin)	
Protection circuit		Output short-circuit protection, and power supply reverse polarity protection	
Ambient temperature		Operating: -10 to 55°C (non-freezing), Storage: -25 to 70°C	
Ambient humidity		Operating: 35% to 85% (no condensation), Storage: 35% to 95% RH	
Operating ambient light intensity		Incandescent lamp: 3,000 lx max., Sunlight: 10,000 lx max.	
Insulation resistance		20 MΩ min. (at 500 VDC)	
Dielectric strength		1,000 VAC 50/60 Hz, 1 min	
Degree of protection		IP65 (IEC 60529)	
Vibration resistance		Malfunction: 10 to 55 Hz, Multiple amplitude of 0.7 mm, 20 sweeps in X, Y, and Z directions	
Shock resistance		Malfunction: 100 m/s^2, 1,000 times each in X, Y, and Z directions	

Pollution degree	Pollution degree 3 (IEC 60664-1)	
Power cable	Connection method: Prewired connector cable, cable length 0.3 m, connector type (M12, 8-pin), connector: IP67 rated (when mated) Number of wires: 8 wires Cable diameter: Dia. 6 mm Allowable bending radius: R5 mm	
Extension cable	30 m max.	
Material	Case: Aluminum Cap: ABS resin, PBT Optical cover: PMMA resin (acrylic) Cable: Oil resistant PVC	
Net Weight ✻6	Weight (g) = (protective height) x 1.62 + 110	Weight (g) = (protective height) x 1.83 + 122
Gross Weight ✻7	Weight (g) = (protective height) x 2.7 + 500	Weight (g) = (protective height) x 2.9 + 550
Accessories	Quick Installation Manual (QIM), Instruction Manual ✻8	
Applicable standards	IEC 61496-1, EN 61496-1, UL 61496-1, Type 4 ESPE (Electro-Sensitive Protective Equipment) IEC 61496-2, EN 61496-2, UL 61496-2, Type 4 AOPD (Active Opto-electronic Protective Devices) IEC 61508-1 to -3, EN 61508-1 to -3 SIL3 ISO 13849-1: 2015, EN ISO 13849-1: 2015 (PLe/Safety Category 4) UL 508, UL 1998, CAN/CSA C22.2 No.14, CAN/CSA C22.2 No.0.8	

Note: 1. The test input logic of the models with the suffix "-01TS" is inverted. Refer to the F3SJ-B□□□□P25-01TS Safety Light Curtain User's Manual (SCHG-734) for details.
2. Reset mode is fixed with auto reset mode.

✻1. Do not use the Support Software and Setting Console for F3SJ-A. Operation cannot be guaranteed.
✻2. Use of the Spatter Protection Cover causes a 10% maximum sensing distance attenuation.
✻3. The load inductance is the maximum value when the safety output frequently repeats ON and OFF. When you use the safety output at 4 Hz or less, the usable load inductance becomes larger.
✻4. These values must be taken into consideration when connecting elements including a capacitive load such as capacitor.
✻5. The Vs indicates a voltage value in your environment.
✻6. The net weight is the weight of an emitter and a receiver.
✻7. The gross weight is the weight of an emitter, a receiver, included accessories and a package.
✻8. Mounting brackets and test rod are sold separately.

Indicator (F3SJ-B□□□□P25-01TS)

Emitter

Name of indicator	Label	ON	Blinking
Top-beam-state indicator	TOP	Turns ON when the top beam is receiving light.	Blinks when cap error or connection error occurs.
Stable-state indicator	STB	Turns ON when incidence level is 170% or more of the output ON threshold.	Blinks when the safety output is turned OFF due to disturbance light or vibration.
ON/OFF-state indicator	ON OFF	Green: Turns ON when safety output is ON. Red: Turns ON when safety output is OFF.	Red: Blinks when the F3SJ-B enters a lockout due to a safety output error.
Lockout indicator	LOCKOUT	Turns ON when the F3SJ-B enters a lockout on the receiver.	Blinks when the F3SJ-B enters a lockout on the emitter.
Power indicator	POWER	Turns ON while the power of the emitter is ON.	Blinks when the F3SJ-B enters a lockout due to power voltage/noise.
Test indicator	TEST	---	Blinks when external test is being performed.
Bottom-beam-state indicator	BTM	Turns ON when the bottom beam is receiving light.	---

Receiver

Name of indicator	Label	ON	Blinking
Top-beam-state indicator	TOP	Turns ON when the top beam is receiving light.	Blinks when cap error or connection error occurs.
Stable-state indicator	STB	Turns ON when incidence level is 170% or more of the output ON threshold.	Blinks when the safety output is turned OFF due to disturbance light or vibration.
ON/OFF-state indicator	ON OFF	Green: Turns ON when safety output is ON. Red: Turns ON when safety output is OFF.	Red: Blinks when the F3SJ-B enters a lockout due to a safety output error.
Lockout indicator	LOCKOUT	Turns ON when the F3SJ-B enters a lockout on the emitter.	Blinks when the F3SJ-B enters a lockout on the receiver.
Communication indicator	COM	Turns ON when communication between emitter and receiver is established.	Blinks when the F3SJ-B enters lockout due to a communication error between receiver and emitter.
Configuration indicator	CFG	---	Blinks when the F3SJ-B enters lockout due to a model type error between receiver and emitter.
Internal error indicator	INTERNAL	---	Blinks when the F3SJ-B enters a lockout due to an internal error.
Interlock indicator	INT -LK	Not used	Not used
External device monitoring indicator	EDM	Turns ON when an input is given to external device monitoring input. ✻	Blinks when the F3SJ-B enters a lockout due to an external device monitoring error.
Bottom-beam-state indicator	BTM	Turns ON when the bottom beam is receiving light.	---

✻ It turns ON when there is an external device monitoring input regardless of the availability of the external device monitoring.

Indicator (F3SJ-B□□□□P25-02TS)

Emitter

Name of indicator	Label	ON	Blinking
Top-beam-state indicator	TOP	Turns ON when the top beam is receiving light.	Blinks during muting/override, or when cap error or connection error occurs.
Stable-state indicator	STB	Turns ON when incidence level is 170% or more of the output ON threshold.	Blinks when the safety output is turned OFF due to disturbance light or vibration.
ON/OFF-state indicator	ON OFF	Green: Turns ON when safety output is ON. Red: Turns ON when safety output is OFF.	Red: Blinks when the F3SJ-B enters a lockout due to a safety output error.
Lockout indicator	LOCKOUT	Turns ON when the F3SJ-B enters a lockout on the receiver.	Blinks when the F3SJ-B enters a lockout on the emitter.
Power indicator	POWER	Turns ON while the power of the emitter is ON.	Blinks when the F3SJ-B enters a lockout due to power voltage/noise.
Test indicator	TEST	---	Blinks when external test is being performed.
Muting error indicator	MUTING ERROR	---	Blinks during a muting error.
Muting input 1 indicator	MUTE1	Turns ON when muting input 1 is ON under the muting system.	---
Muting input 2 indicator	MUTE2	Turns ON when muting input 2 is ON under the muting system.	---
Bottom-beam-state indicator	BTM	Turns ON when the bottom beam is receiving light.	Blinks during muting/override.

Receiver

Name of indicator	Label	ON	Blinking
Top-beam-state indicator	TOP	Turns ON when the top beam is receiving light.	Blinks during muting/override, or when cap error or connection error occurs.
Stable-state indicator	STB	Turns ON when incidence level is 170% or more of the output ON threshold.	Blinks when the safety output is turned OFF due to disturbance light or vibration.
ON/OFF-state indicator	ON OFF	Green: Turns ON when safety output is ON. Red: Turns ON when safety output is OFF.	Red: Blinks when the F3SJ-B enters a lockout due to a safety output error.
Lockout indicator	LOCKOUT	Turns ON when the F3SJ-B enters a lockout on the emitter.	Blinks when the F3SJ-B enters a lockout on the receiver.
Communication indicator	COM	Turns ON when communication between emitter and receiver is established.	Blinks when the F3SJ-B enters lockout due to a communication error between receiver and emitter.
Configuration indicator	CFG	---	Blinks when the F3SJ-B enters lockout due to a model type error between receiver and emitter.
Internal error indicator	INTERNAL	---	Blinks when the F3SJ-B enters a lockout due to an internal error.
Interlock indicator	INT -LK	Not used	Not used
External device monitoring indicator	EDM	Turns ON when an input is given to external device monitoring input. ✻	Blinks when the F3SJ-B enters a lockout due to an external device monitoring error.
Bottom-beam-state indicator	BTM	Turns ON when the bottom beam is receiving light.	Blinks during muting/override.

✻ It turns ON when there is an external device monitoring input regardless of the availability of the external device monitoring.

Accessories

Control Unit

Item / Model		F3SP-B1P
Applicable sensor		F3SJ-B/A (Only for PNP output type) ✻
Power supply voltage		24 VDC±10%
Power consumption		DC1.7 W max. (not including sensor's current consumption)
Operation time		100 ms max. (not including sensor's response time)
Response time		100 ms max. (not including sensor's response time)
Relay output	Number of contacts	3NO+1NC
	Rated load	25 VAC 5 A (cos φ = 1), 30 VDC 5 A L/R = 0 ms
	Rated current	5 A
Connection type	Between sensors	M12 connector (8-pin)
	Others	Terminal block
Weight (packed state)		Approx. 280 g
Accessories		Instruction manual

✻ NPN output type cannot be connected. Also, the system cannot be used as a muting system.

Laser Pointer

Item / Model	F39-PTJ
Applicable sensor	F3SJ Series ✻**1**
Power supply voltage	4.65 or 4.5 VDC
Battery	Three button batteries (SR44 or LR44)
Battery life ✻2	SR44: 10 hours of continuous operation, LR44: 6 hours of continuous operation
Light source	Red semiconductor laser (wavelength: 650 nm, 1 mW max. JIS class 2, EN/IEC class 2, FDA class II)
Spot diameter (typical value)	6.5 mm at 10 m
Ambient temperature	Operating: 0 to 40°C Storage: -15 to 60°C (with no icing or condensation)
Ambient humidity	Operating and storage: 35% to 85% (with no condensation)
Material	Laser module case: aluminum Mounting bracket: aluminum and stainless
Weight	Approx. 220 g (packed)
Accessories	Laser safety standard labels (EN: 1, FDA: 3) Button batteries (SR44: 3), instruction manual

✻**1.** It cannot be mounted to the models with the suffix "-02TS".
✻**2.** Battery life varies depending on a battery used.

Connections

Basic Wiring Diagram

Wiring when using manual reset mode, external device monitoring (F3SJ-B□□□□P25) [PNP Output]

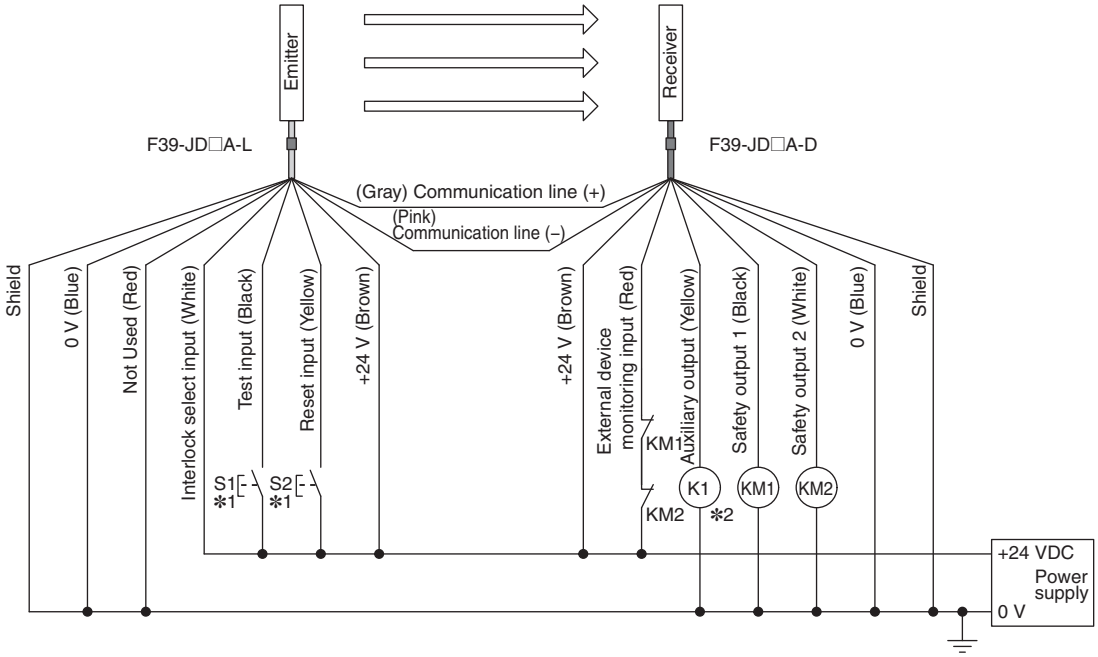

S1 : External test switch (connect to 0 V if a switch is not required)
S2 : Interlock/lockout reset switch
KM1, KM2 : Safety relay with force-guided contact (G7SA) or magnetic contactor
K1 : Load or PLC, etc. (for monitoring)

✻1. Use a switch for small loads (input specifications: 24 V, 1.0 mA max.).
✻2. F3SJ operates even when K1 is not connected.

Wiring when using manual reset mode, external device monitoring (F3SJ-B□□□□N25) [NPN Output]

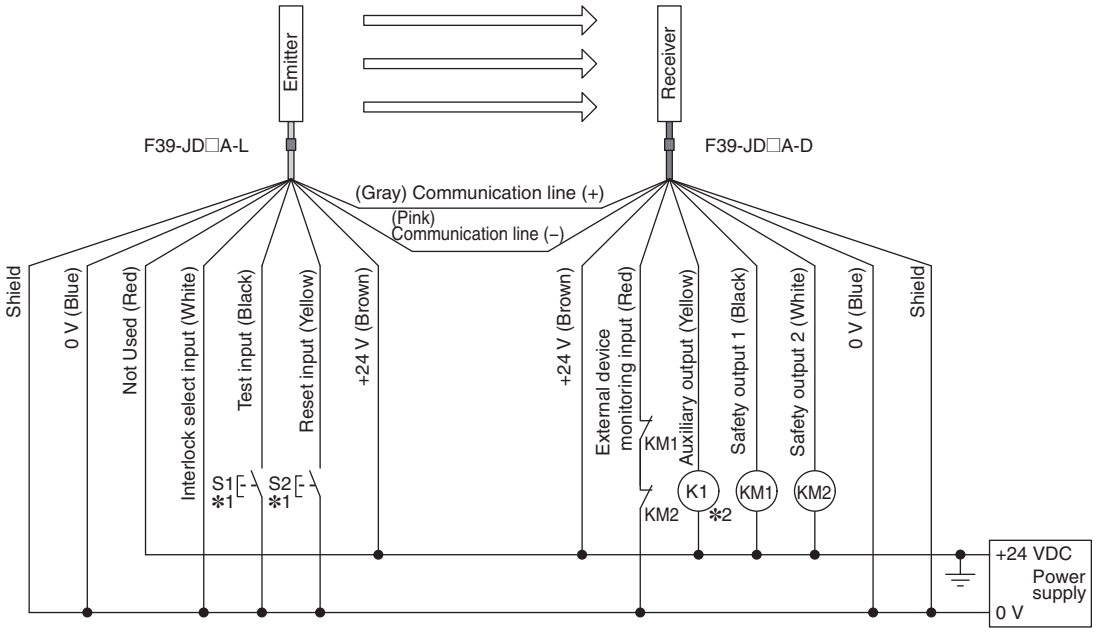

S1 : External test switch (connect to 24 V if a switch is not required)
S2 : Interlock/lockout reset switch
KM1, KM2 : Safety relay with force-guided contact (G7SA) or magnetic contactor
K1 : Load or PLC, etc. (for monitoring)

✻1. Use a switch for small loads (input specifications: 24 V, 1.0 mA max.).
✻2. F3SJ operates even when K1 is not connected.

Wiring for manual reset mode and deactivated external device monitoring function (F3SJ-B□□□□P25) [PNP Output]

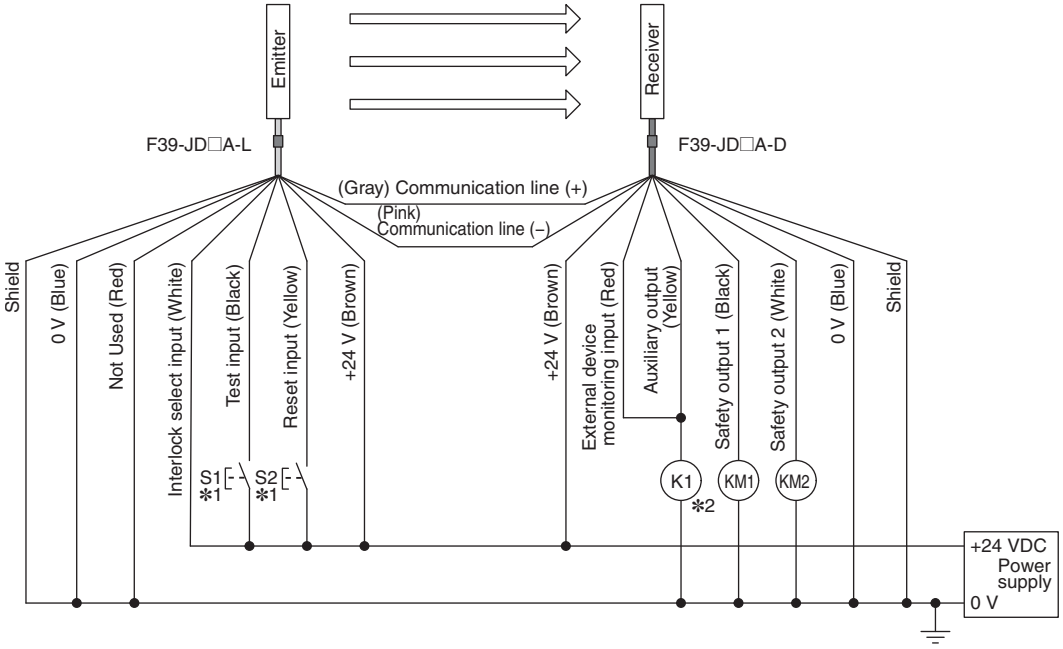

S1 : External test switch (connect to 0 V if a switch is not required)
S2 : Interlock/lockout reset switch
KM1, KM2 : Safety relay with force-guided contact (G7SA) or magnetic contactor
K1 : Load or PLC, etc. (for monitoring)

✻1. Use a switch for small loads (input specifications: 24 V, 1.0 mA max.).
✻2. F3SJ operates even when K1 is not connected.

Wiring for manual reset mode and deactivated external device monitoring function (F3SJ-B□□□□N25) [NPN Output]

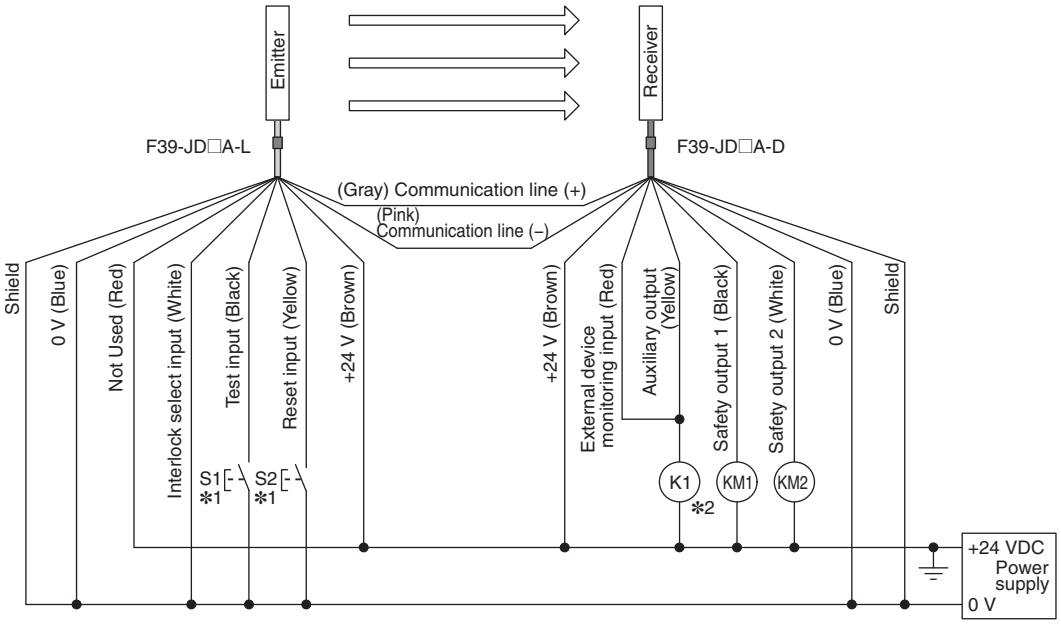

S1 : External test switch (connect to 24 V if a switch is not required)
S2 : Interlock/lockout reset switch
KM1, KM2 : Safety relay with force-guided contact (G7SA) or magnetic contactor
K1 : Load or PLC, etc. (for monitoring)

✻1. Use a switch for small loads (input specifications: 24 V, 1.0 mA max.).
✻2. F3SJ operates even when K1 is not connected.

Wiring for auto reset mode and external device monitoring function (F3SJ-B□□□□P25) [PNP Output]

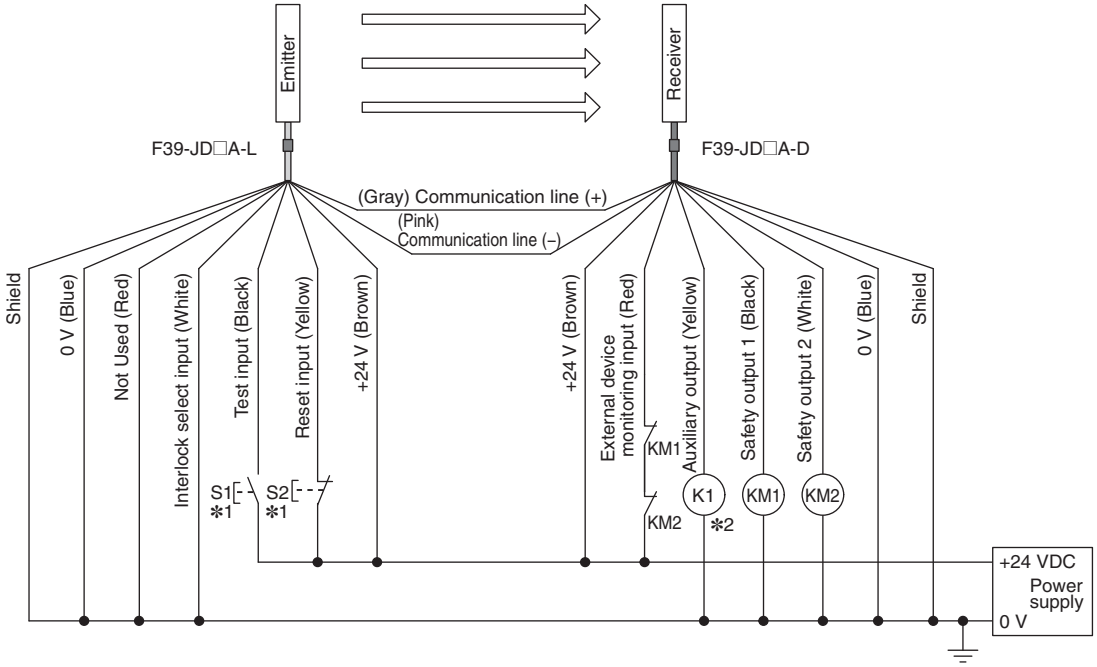

S1 : External test switch (connect to 0 V if a switch is not required)
S2 : Lockout reset switch (connect to 24 V if a switch is not required)
KM1, KM2 : Safety relay with force-guided contact (G7SA) or magnetic contactor
K1 : Load or PLC, etc. (for monitoring)

✻1. Use a switch for small loads (input specifications: 24 V, 1.0 mA max.).
✻2. F3SJ operates even when K1 is not connected.

Wiring for auto reset mode and external device monitoring function (F3SJ-B□□□□N25) [NPN Output]

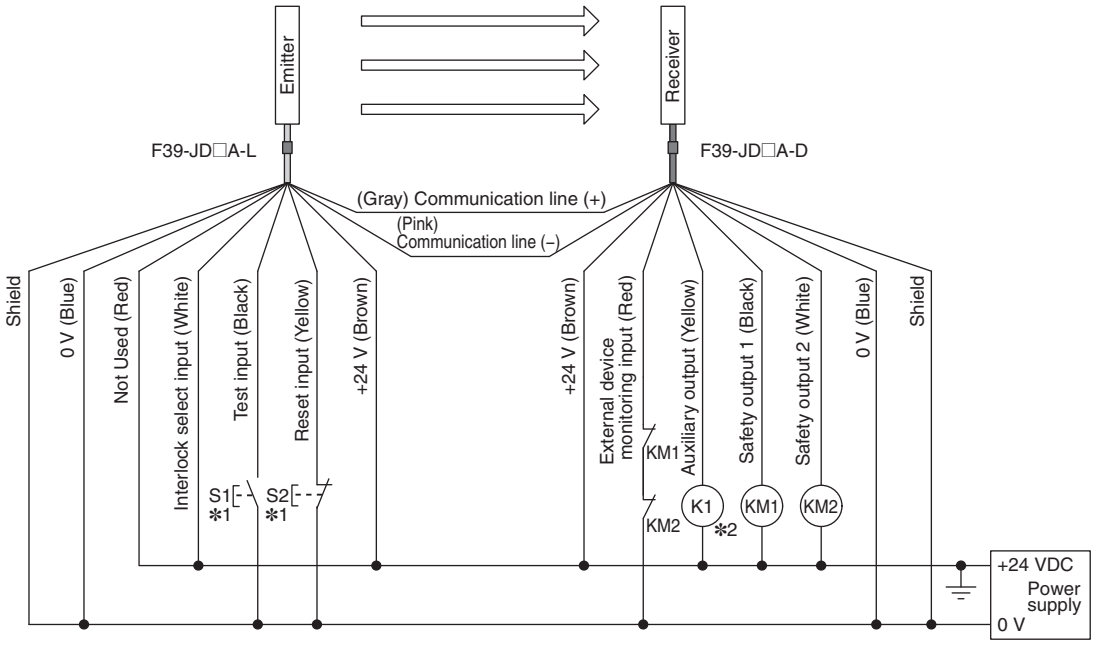

S1 : External test switch (connect to 24 V if a switch is not required)
S2 : Lockout reset switch (connect to 0 V if a switch is not required)
KM1, KM2 : Safety relay with force-guided contact (G7SA) or magnetic contactor
K1 : Load or PLC, etc. (for monitoring)

✻1. Use a switch for small loads (input specifications: 24 V, 1.0 mA max.).
✻2. F3SJ operates even when K1 is not connected.

Wiring for auto reset mode and deactivated external device monitoring (F3SJ-B□□□□P25) [PNP Output]

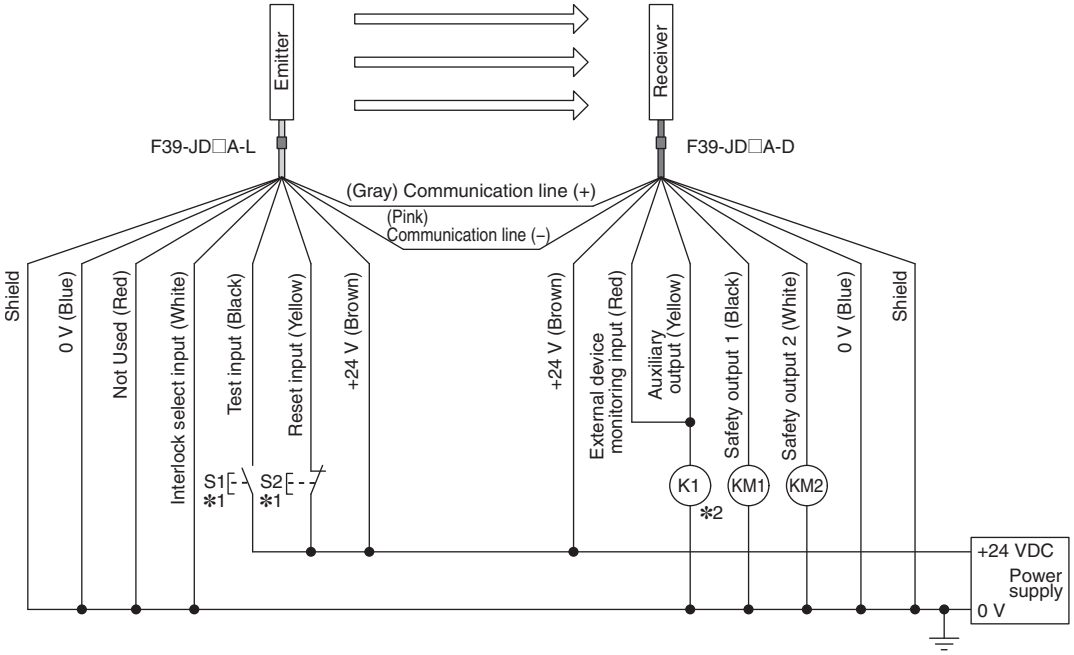

S1 : External test switch (connect to 0 V if a switch is not required)
S2 : Lockout reset switch (connect to 24 V if a switch is not required)
KM1, KM2 : Safety relay with force-guided contact (G7SA) or magnetic contactor
K1 : Load or PLC, etc. (for monitoring)

✻1. Use a switch for small loads (input specifications: 24 V, 1.0 mA max.).
✻2. F3SJ operates even when K1 is not connected.

Wiring for auto reset mode and deactivated external device monitoring (F3SJ-B□□□□N25) [NPN Output]

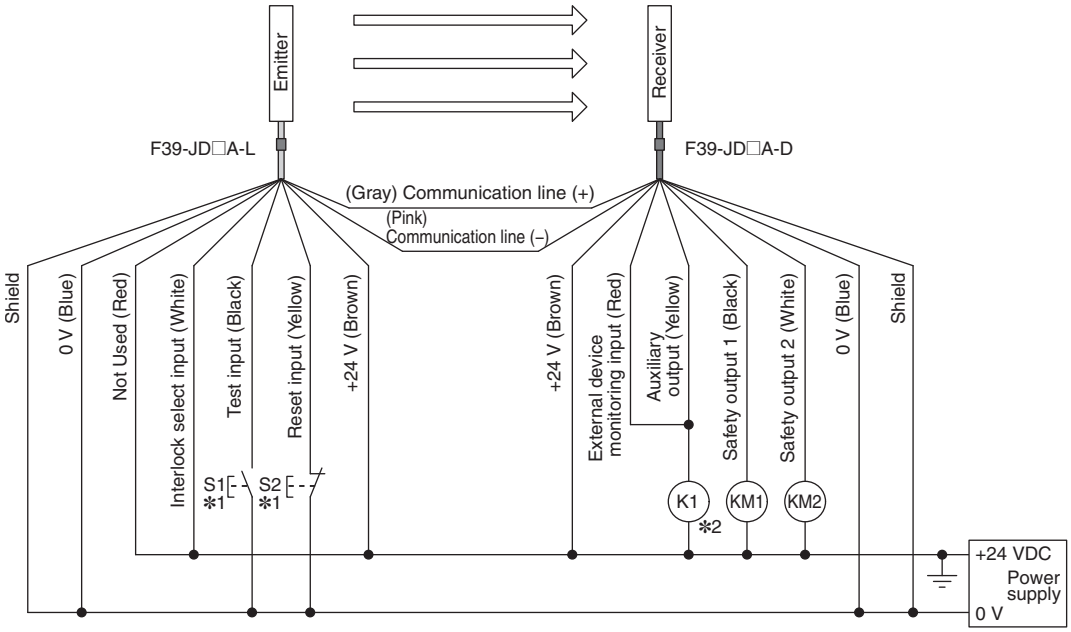

S1 : External test switch (connect to 24 V if a switch is not required)
S2 : Lockout reset switch (connect to 0 V if a switch is not required)
KM1, KM2 : Safety relay with force-guided contact (G7SA) or magnetic contactor
K1 : Load or PLC, etc. (for monitoring)

✻1. Use a switch for small loads (input specifications: 24 V, 1.0 mA max.).
✻2. F3SJ operates even when K1 is not connected.

Minimum wiring required to check the operation of the F3SJ-B (Wiring for deactivated external device monitoring) (F3SJ-B□□□□P25-01TS) [PNP Output]

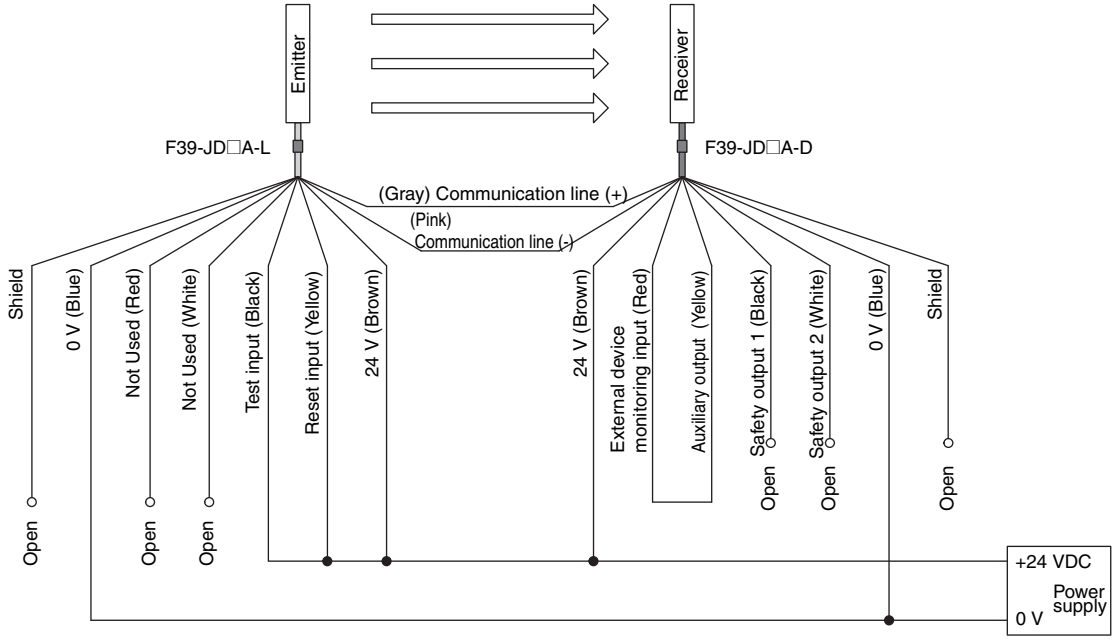

Minimum wiring required to check the operation of the F3SJ-B (Wiring for deactivated external device monitoring) (F3SJ-B□□□□P25-02TS) [PNP Output]

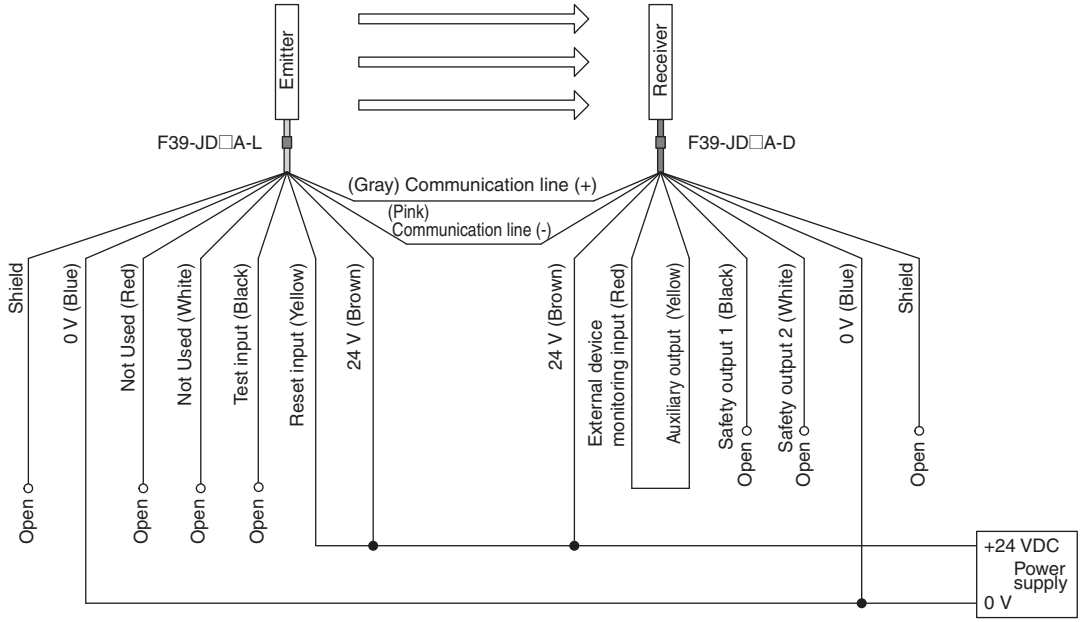

Wiring for external device monitoring function (F3SJ-B□□□□P25-01TS) [PNP Output]

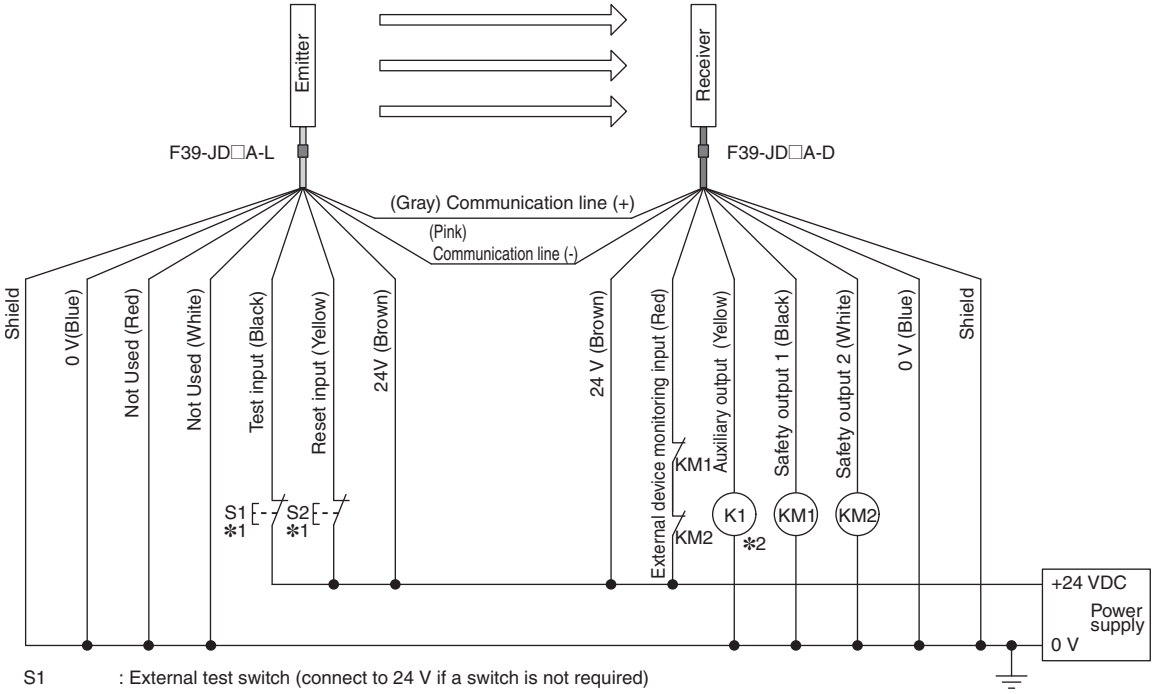

S1 : External test switch (connect to 24 V if a switch is not required)
S2 : Lockout reset switch (connect to 24 V if a switch is not required)
KM1, KM2 : Safety relay with force-guided contact (G7SA) or magnetic contactor
K1 : Load or PLC, etc. (for monitoring)

***1.** Use a switch for small loads (input specifications: 24 V, 1.0 mA max.).
***2.** F3SJ operates even when K1 is not connected.

Wiring for external device monitoring function (F3SJ-B□□□□P25-02TS) [PNP Output]

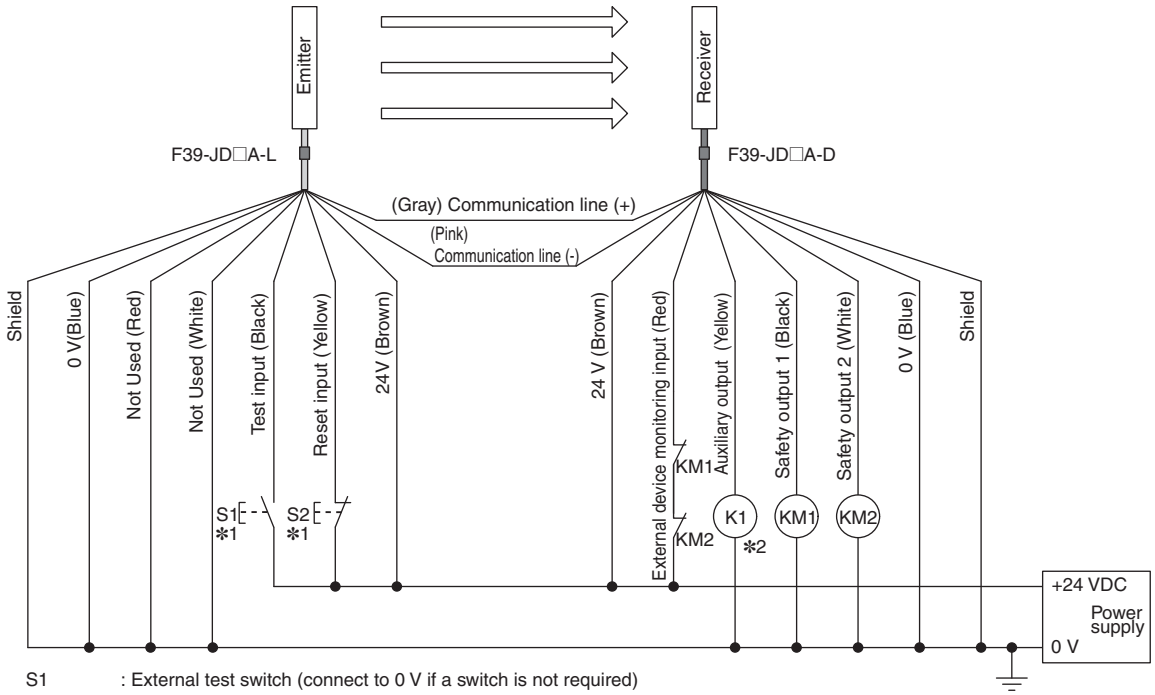

S1 : External test switch (connect to 0 V if a switch is not required)
S2 : Lockout reset switch (connect to 24 V if a switch is not required)
KM1, KM2 : Safety relay with force-guided contact (G7SA) or magnetic contactor
K1 : Load or PLC, etc. (for monitoring)

***1.** Use a switch for small loads (input specifications: 24 V, 1.0 mA max.).
***2.** F3SJ operates even when K1 is not connected.

Wiring for deactivated external device monitoring function (F3SJ-B□□□□P25-01TS) [PNP Output]

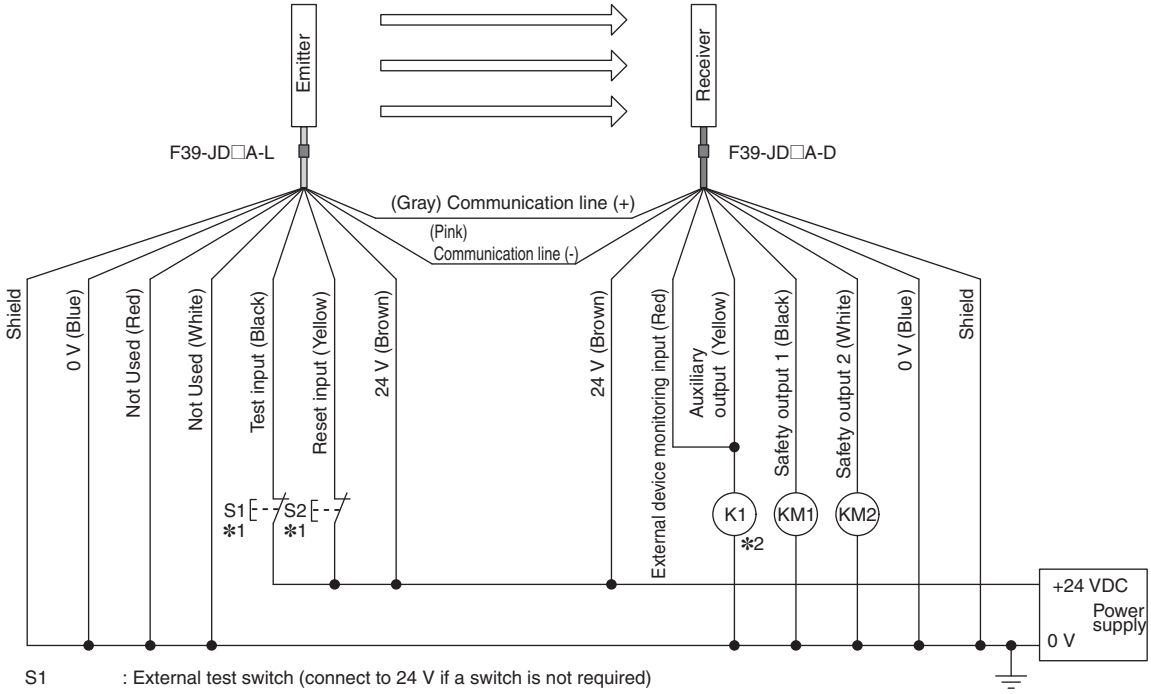

S1 : External test switch (connect to 24 V if a switch is not required)
S2 : Lockout reset switch (connect to 24 V if a switch is not required)
KM1, KM2 : Safety relay with force-guided contact (G7SA) or magnetic contactor
K1 : Load or PLC, etc. (for monitoring)

***1.** Use a switch for small loads (input specifications: 24 V, 1.0 mA max.).
***2.** F3SJ operates even when K1 is not connected.

Wiring for deactivated external device monitoring function (F3SJ-B□□□□P25-02TS) [PNP Output]

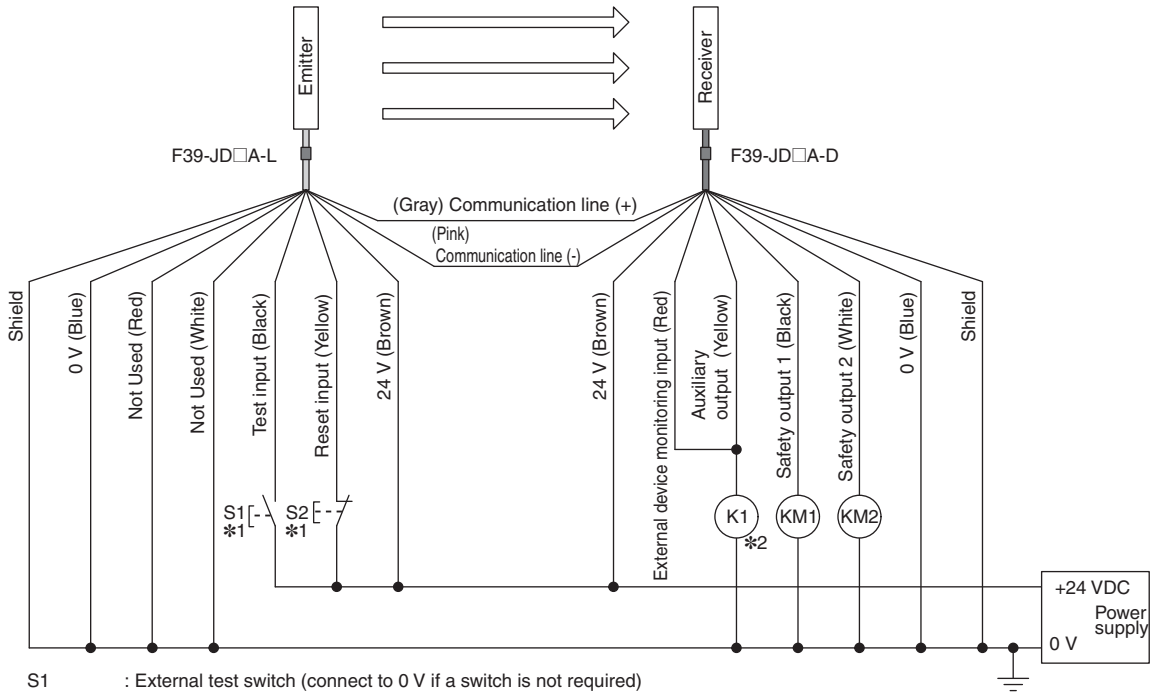

S1 : External test switch (connect to 0 V if a switch is not required)
S2 : Lockout reset switch (connect to 24 V if a switch is not required)
KM1, KM2 : Safety relay with force-guided contact (G7SA) or magnetic contactor
K1 : Load or PLC, etc. (for monitoring)

***1.** Use a switch for small loads (input specifications: 24 V, 1.0 mA max.).
***2.** F3SJ operates even when K1 is not connected.

Basic Wiring Diagram for Muting System

Wiring for muting function (F3SJ-B□□□□P25) [PNP Output]

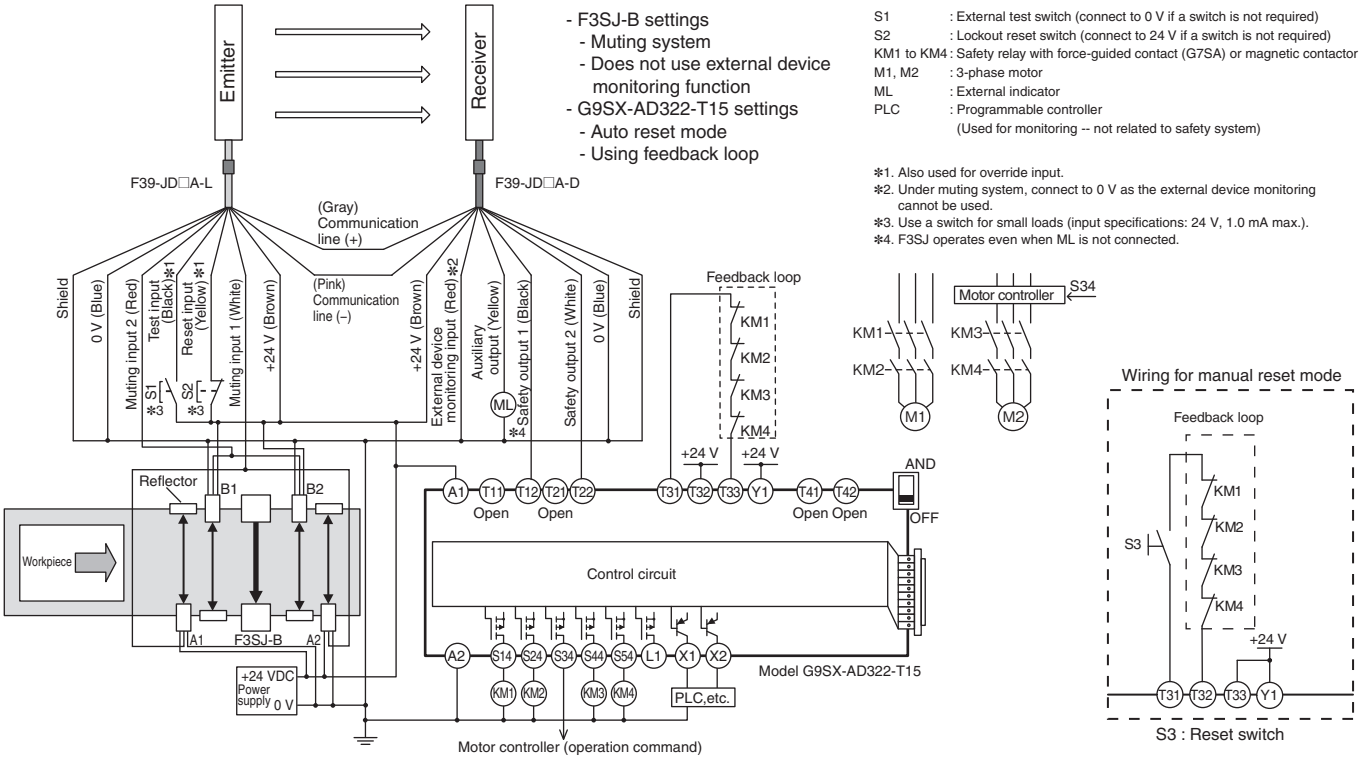

S1 : External test switch (connect to 0 V if a switch is not required)
S2 : Lockout reset switch (connect to 24 V if a switch is not required)
KM1 to KM4 : Safety relay with force-guided contact (G7SA) or magnetic contactor
M1, M2 : 3-phase motor
ML : External indicator
PLC : Programmable controller
(Used for monitoring -- not related to safety system)

*1. Also used for override input.
*2. Under muting system, connect to 0 V as the external device monitoring cannot be used.
*3. Use a switch for small loads (input specifications: 24 V, 1.0 mA max.).
*4. F3SJ operates even when ML is not connected.

Wiring for muting function (F3SJ-B□□□□N25) [NPN Output]

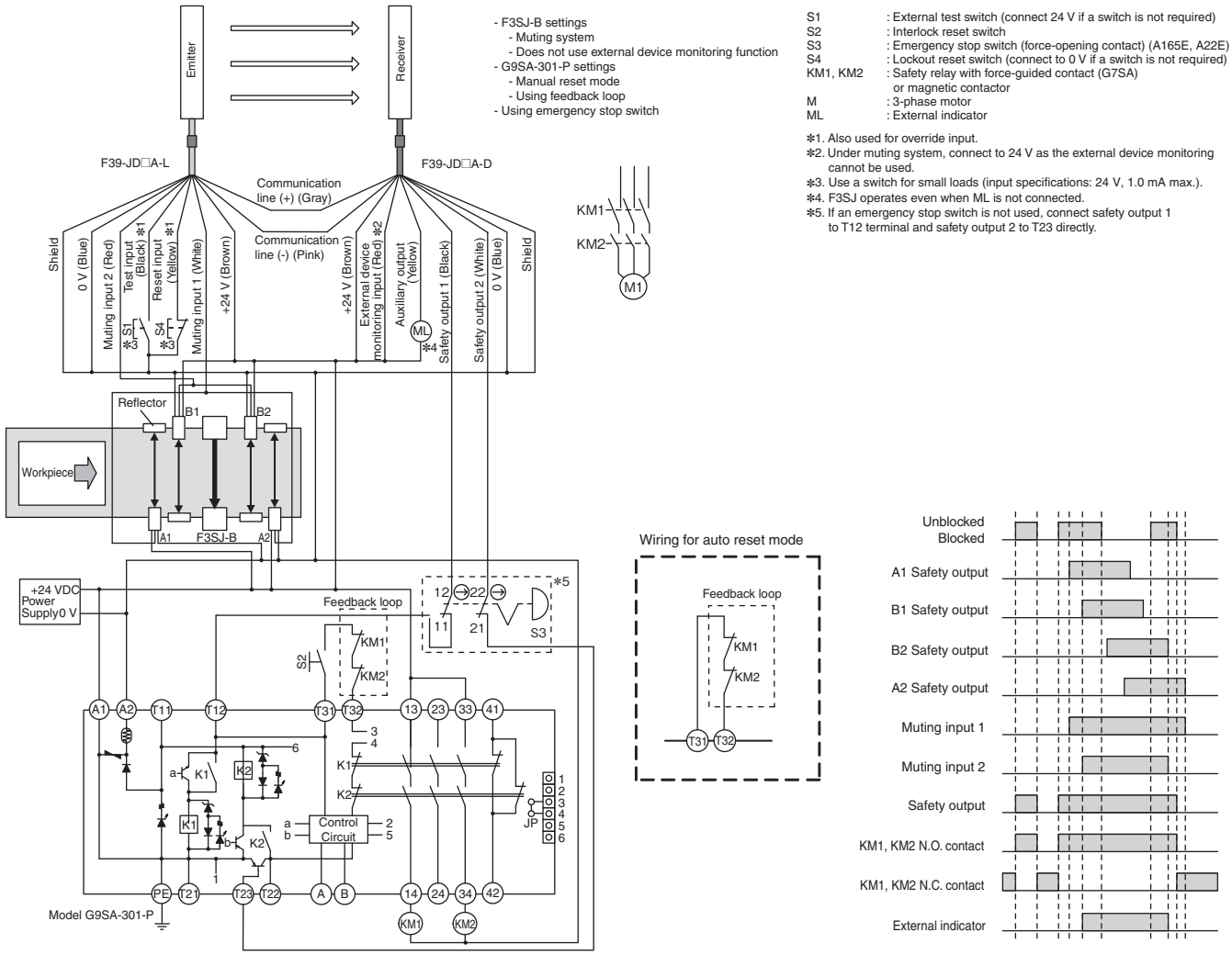

S1 : External test switch (connect 24 V if a switch is not required)
S2 : Interlock reset switch
S3 : Emergency stop switch (force-opening contact) (A165E, A22E)
S4 : Lockout reset switch (connect to 0 V if a switch is not required)
KM1, KM2 : Safety relay with force-guided contact (G7SA) or magnetic contactor
M : 3-phase motor
ML : External indicator

*1. Also used for override input.
*2. Under muting system, connect to 24 V as the external device monitoring cannot be used.
*3. Use a switch for small loads (input specifications: 24 V, 1.0 mA max.).
*4. F3SJ operates even when ML is not connected.
*5. If an emergency stop switch is not used, connect safety output 1 to T12 terminal and safety output 2 to T23 directly.

Wiring Diagram When Using Simple Wiring System

F39-CN5 simple wiring connector

Internal wiring of F39-CN5 simple wiring connector

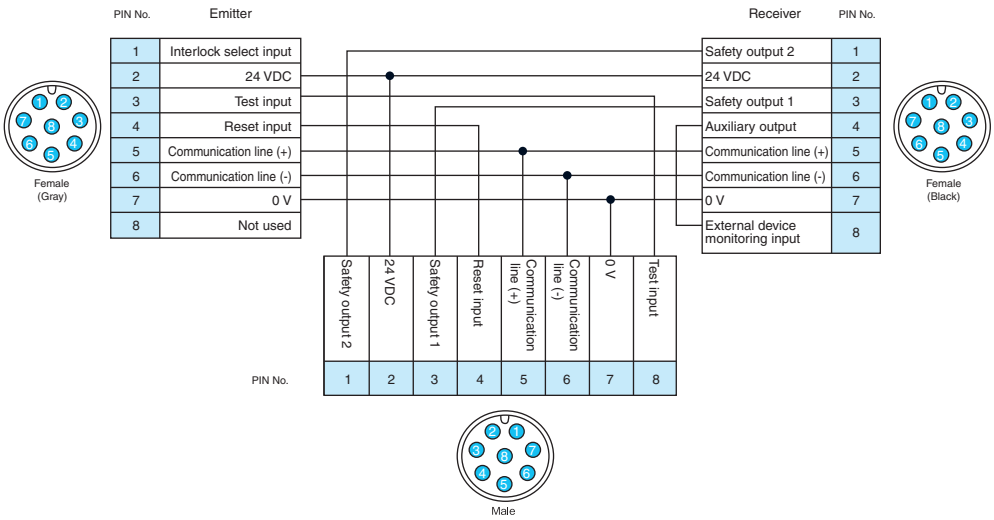

[PNP Output]

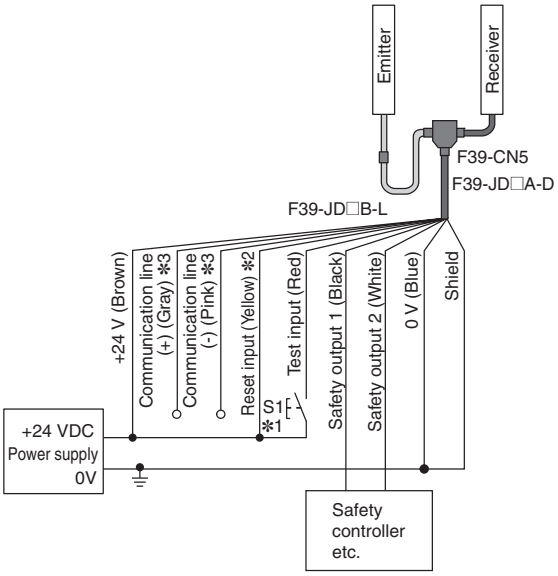

S1 : External test switch (connect 0 V if a switch is not required)

✻1. Use a switch for small loads (input specifications: 24 V, 1.0 mA max.).

✻2. When the lockout reset function is used, connect to 24 V via a lockout reset switch (N.C. contact).

✻3. Make sure the Communication lines are insulated. If the lines are shorted, the F3SJ-B enters the lockout state.

Controllers connectable with PNP output F3SJ series

Safety controller	Model
Safety Network Controller	NE1A series
Safety Controller	G9SP series
Flexible Safety Unit	G9SX series
Safety Relay Unit	G9SA series

[NPN Output]

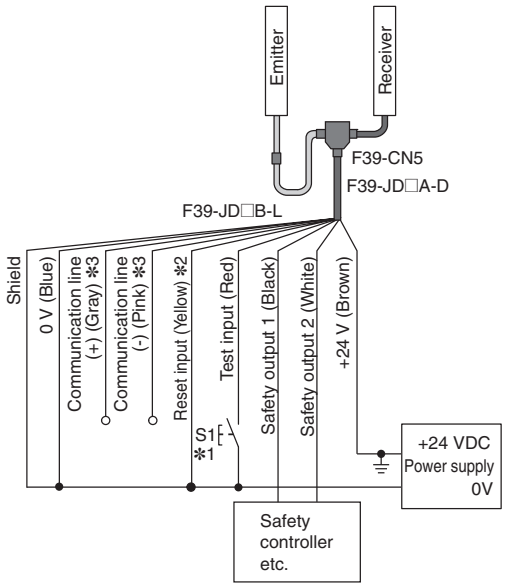

S1 : External test switch (connect 24 V if a switch is not required)

✻1. Use a switch for small loads (input specifications: 24 V, 1.0 mA max.).

✻2. When the lockout reset function is used, connect to 0 V via a lockout reset switch (N.C. contact).

✻3. Make sure the Communication lines are insulated. If the lines are shorted, the F3SJ-B enters the lockout state.

Controller connectable with NPN output F3SJ series

Safety controller	Model
Safety Relay Unit	G9SA-301-P

Note: When using the Simple Wiring Connector (F39-CN5), the following functions are not available.

- Manual Reset
- External Device Monitoring
- Auxiliary Output
- Muting/Override

Input/Output Circuit Diagram

F3SJ-B□□□□P25 [PNP Output]

Entire Circuit Diagram

The numbers in circles indicate the connectors' pin numbers.
The words in brackets ([ ]) indicate the signal name for muting system.

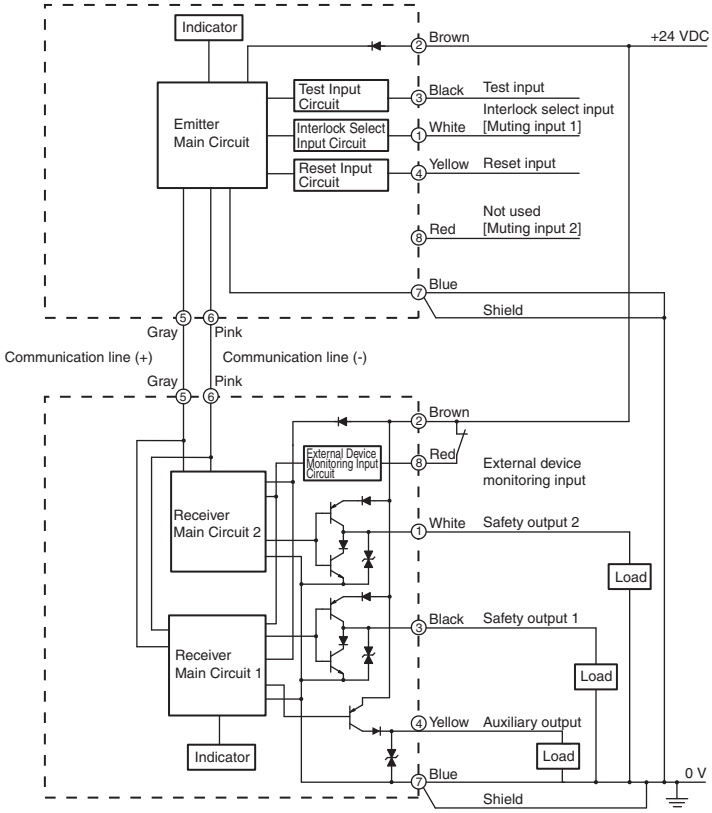

Input circuit diagram by function

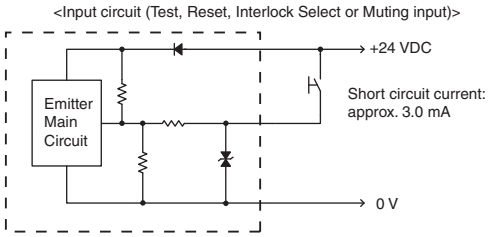

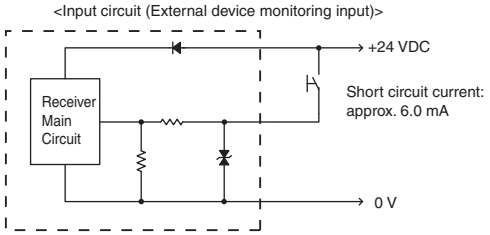

F3SJ-B□□□□N25 [NPN Output]

Entire Circuit Diagram

The numbers in circles indicate the connectors' pin numbers.
The words in brackets ([ ]) indicate the signal name for muting system.

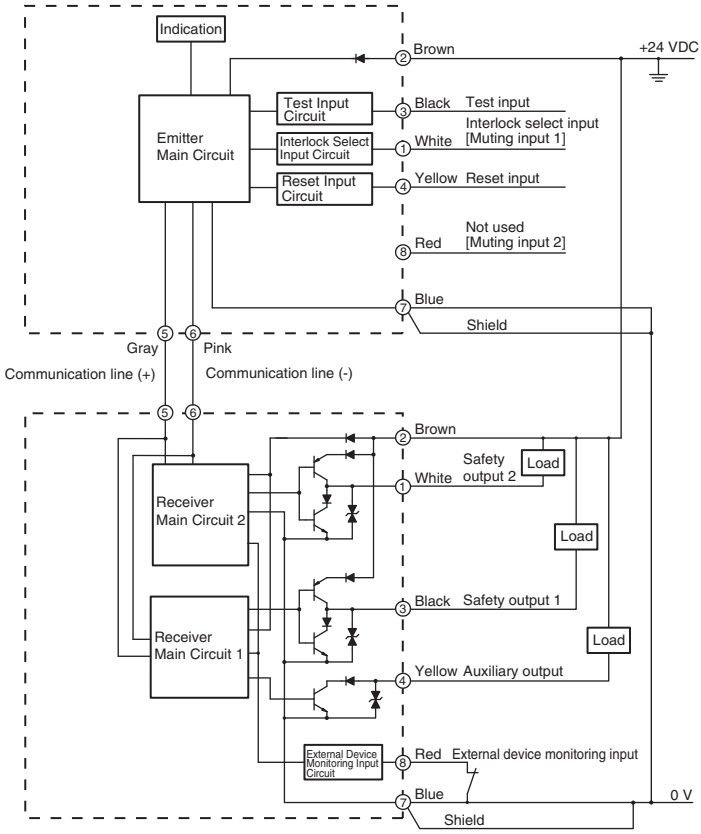

Input circuit diagram by function

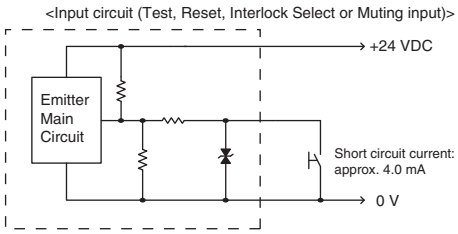

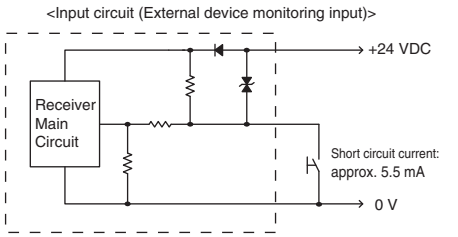

F3SJ-B□□□□P25-01TS [PNP Output]

Entire Circuit Diagram

The numbers in circles indicate the connectors' pin numbers.

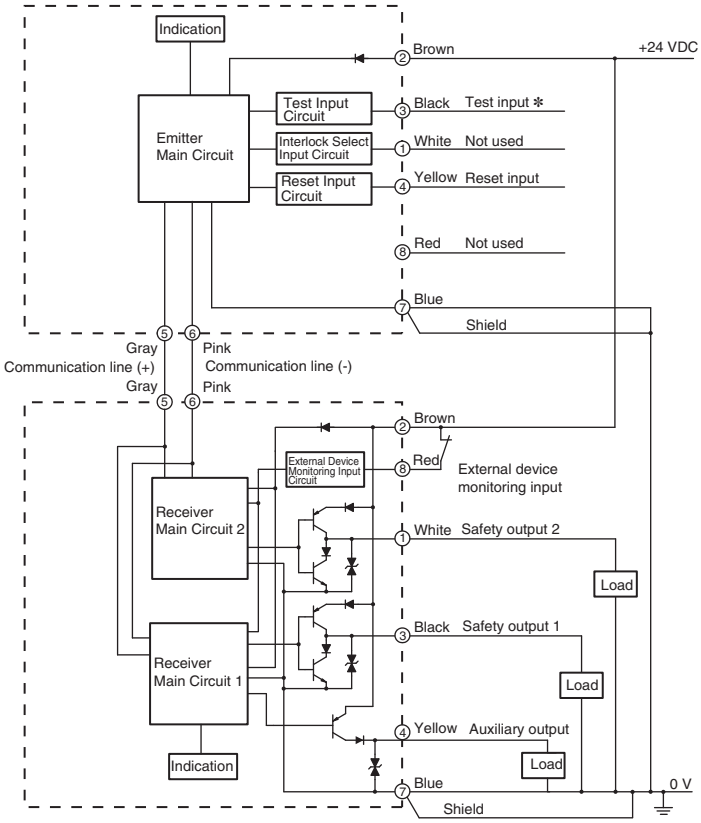

✻ The light emission stops when opening the test input line or applying voltage of 0 V to 1/2 Vs to the test input line.

Input circuit diagram by function

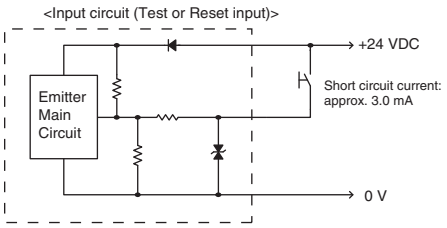

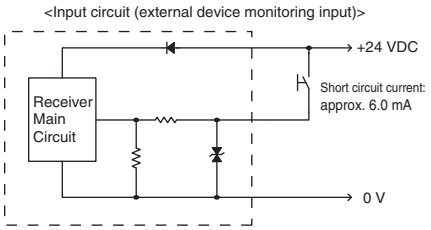

F3SJ-B□□□□P25-02TS [PNP Output]

Entire Circuit Diagram

The numbers in circles indicate the connectors' pin numbers.
The words in brackets ([ ]) indicate the signal name for muting system.

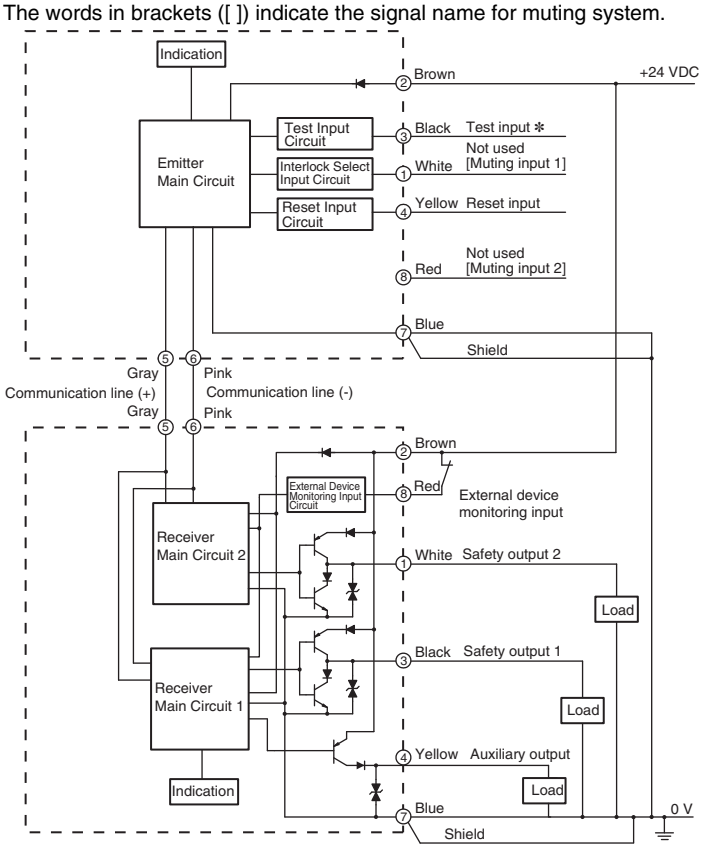

✻ The light emission stops when applying voltage of Vs-3 V to Vs to the test input line.

Input circuit diagram by function

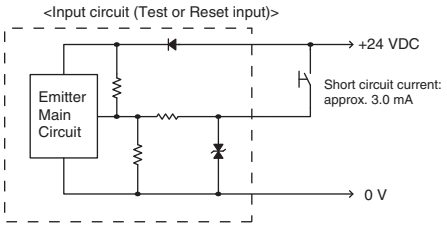

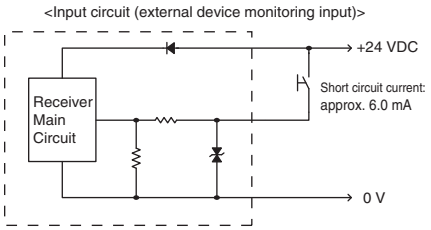

Connection Circuit Examples

Wiring for single F3SJ-B application (F3SJ-B□□□□P25) [PNP Output]

Highest achievable PL/ safety category	Model	Stop category	Reset
PLe/4 equivalent	Safety Light Curtain F3SJ-B□□□□P25 Safety Relay G7SA	0	Manual

Note: The above PL is only the evaluation result of the example. The PL must be evaluated in an actual application by the customer after confirming the usage conditions.

● Application Overview

- The power supply to the motor M is turned OFF when the beam is blocked.
- The power supply to the motor M is kept OFF until the beams are unblocked and the reset switch S2 is pressed.

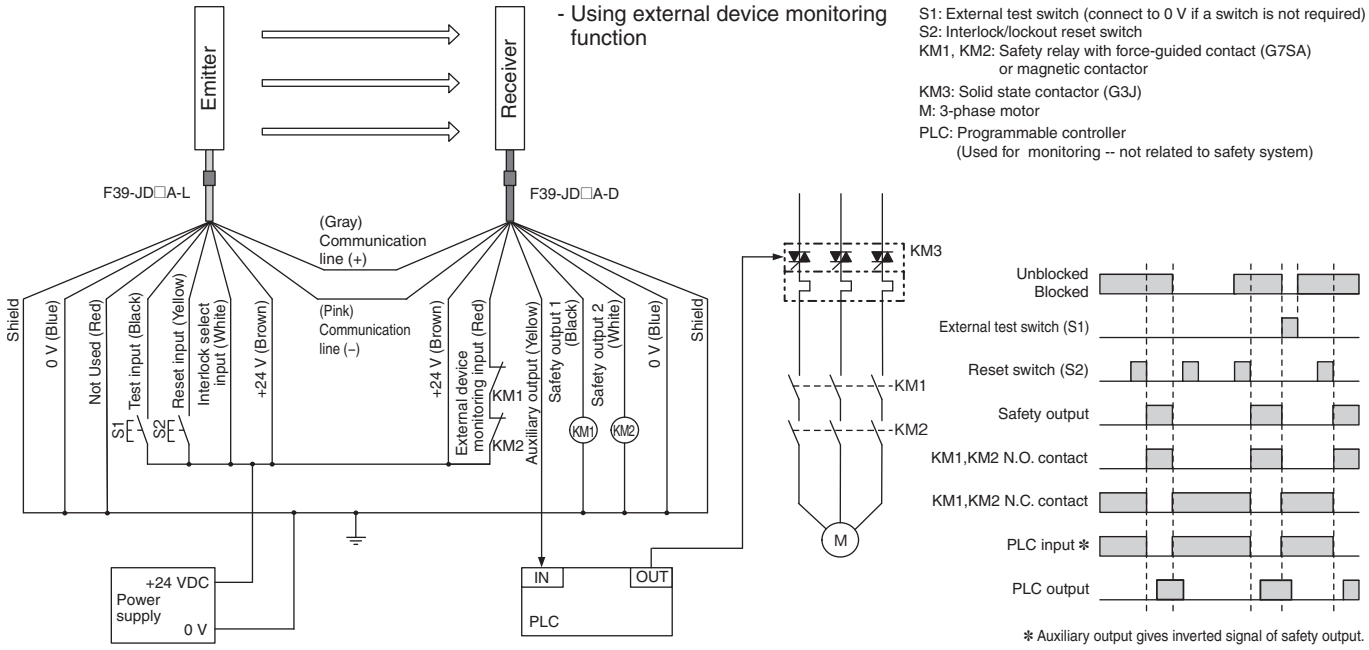

Wiring for single F3SJ-B application (F3SJ-B□□□□N25) [NPN Output]

Highest achievable PL/ safety category	Model	Stop category	Reset
PLe/4 equivalent	Safety Light Curtain F3SJ-B□□□□N25 Safety Relay G7SA	0	Manual

Note: The above PL is only the evaluation result of the example. The PL must be evaluated in an actual application by the customer after confirming the usage conditions.

● Application Overview

- The power supply to the motor M is turned OFF when the beam is blocked.
- The power supply to the motor M is kept OFF until the beams are unblocked and the reset switch S2 is pressed.

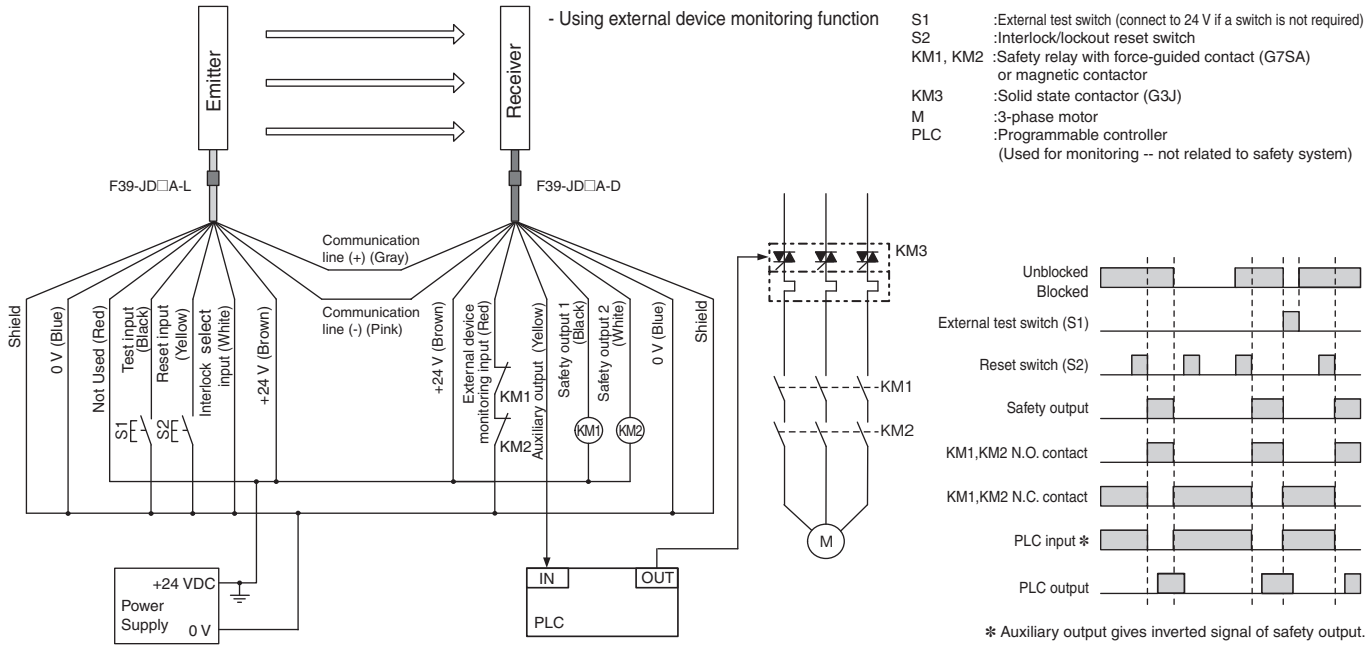

Wiring to connect a F3SJ-B with a controller G9SP (F3SJ-B□□□□P25) [PNP Output]

Highest achievable PL/ safety category	Model	Stop category	Reset
PLe/4 equivalent	Safety Light Curtain F3SJ-B□□□□P25 Safety Controller G9SP Safety Relay G7SA Emergency Stop Switch A165E/A22E	0	Manual

Note: The above PL is only the evaluation result of the example. The PL must be evaluated in an actual application by the customer after confirming the usage conditions.

● Application Overview

- The power supply to the motor M is turned OFF when the beam is blocked.
- The power supply to the motor M is turned OFF when the emergency stop switch is pressed.
- The power supply to the motor M is kept OFF until the beams are unblocked and the reset switch S2 is pressed while the emergency stop switch is released.

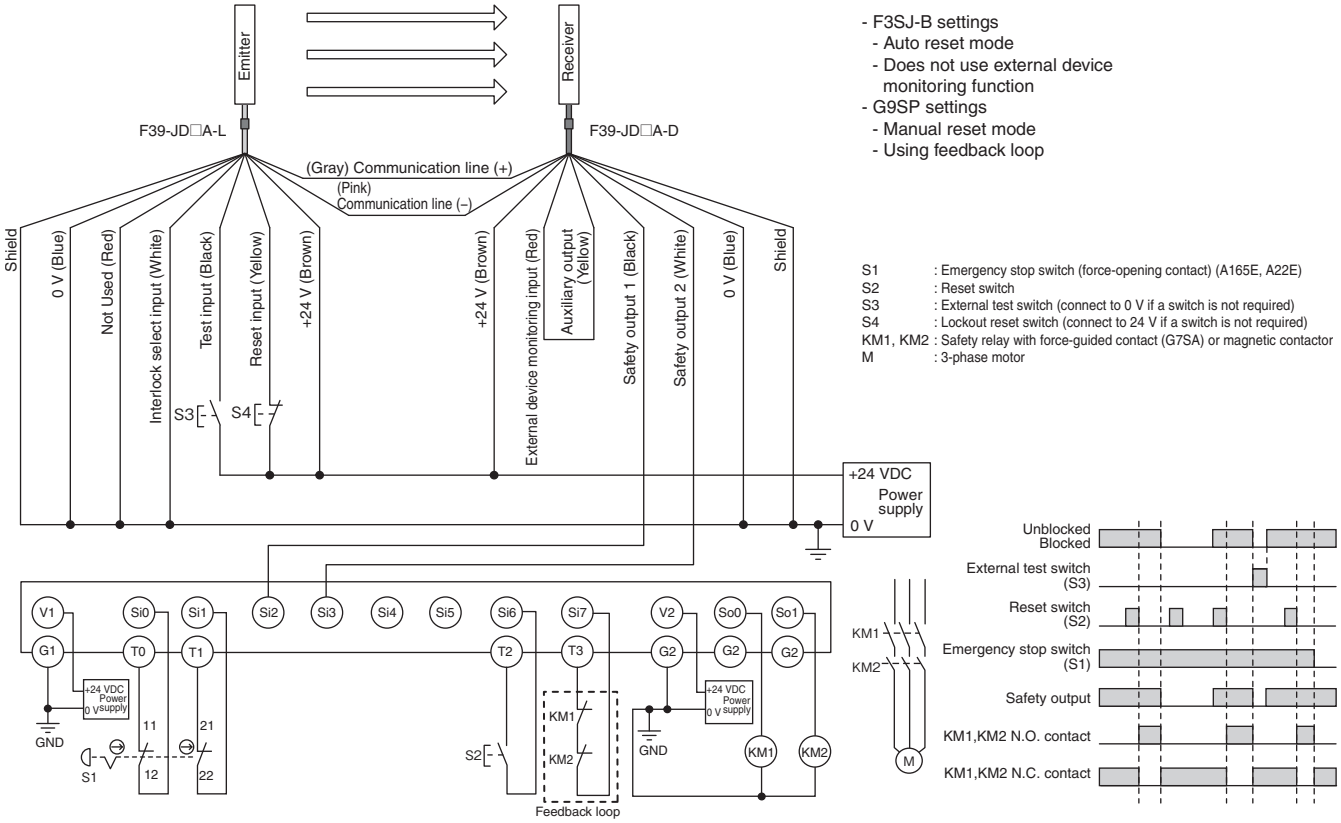

Wiring to connect a F3SJ-B with a controller F3SP-B1P (F3SJ-B□□□□P25) [PNP Output]

Highest achievable PL/ safety category	Model	Stop category	Reset
PLe/4 equivalent	Safety Light Curtain F3SJ-B□□□□P25 Control Unit F3SP-B1P Safety Relay G7SA	0	Manual

Note: The above PL is only the evaluation result of the example. The PL must be evaluated in an actual application by the customer after confirming the usage conditions.

● **Application Overview**

- The power supply to the motor M is turned OFF when the beam is blocked.
- The power supply to the motor M is kept OFF until the beams are unblocked and the reset switch S2 is pressed.

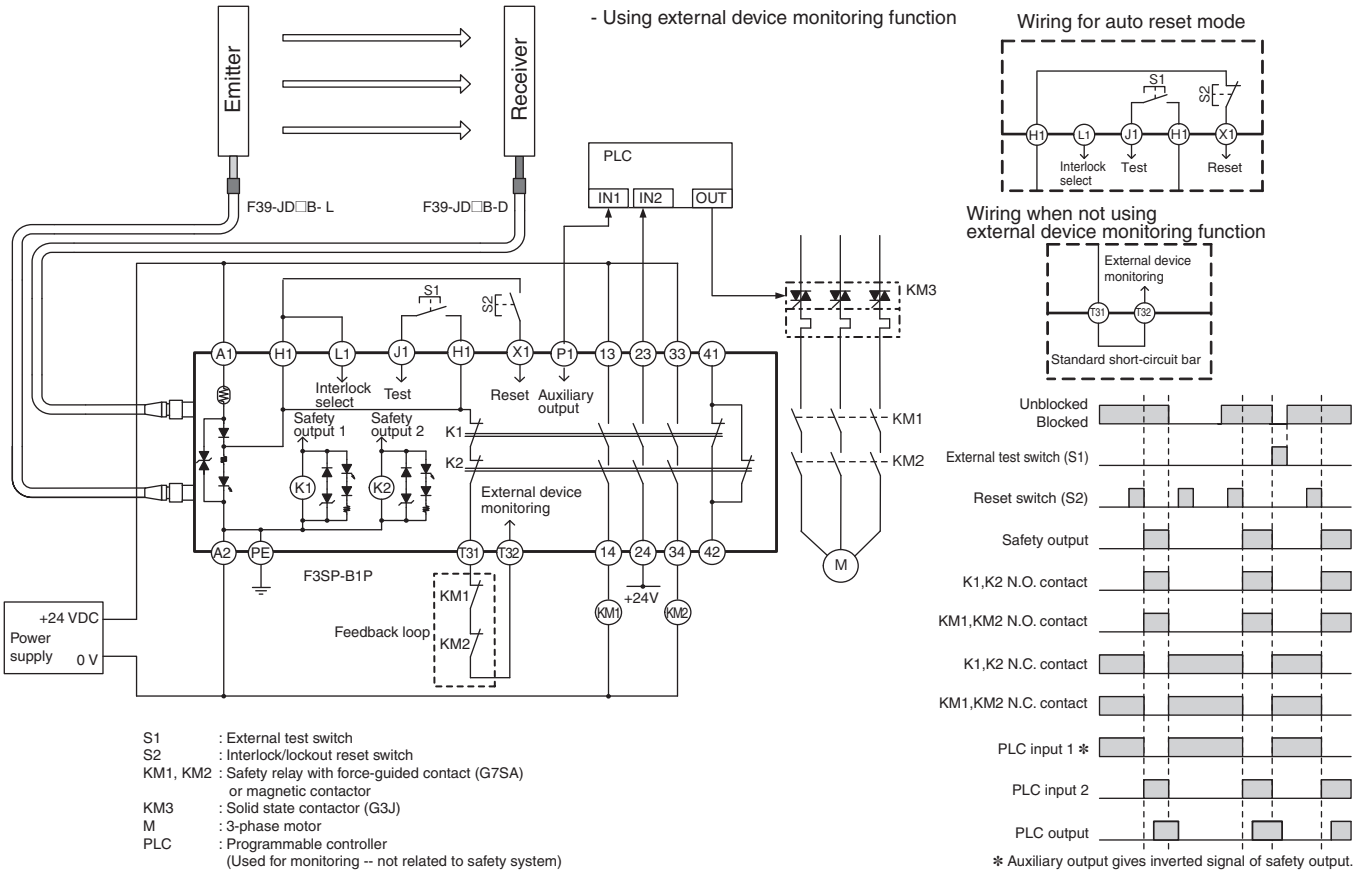

S1 : External test switch
S2 : Interlock/lockout reset switch
KM1, KM2 : Safety relay with force-guided contact (G7SA) or magnetic contactor
KM3 : Solid state contactor (G3J)
M : 3-phase motor
PLC : Programmable controller (Used for monitoring -- not related to safety system)

Note: It cannot be used as a muting system when F3SP-B1P is used.

Wiring to connect a F3SJ-B with a controller G9SA-301-P (F3SJ-B□□□□N25) [NPN Output]

Highest achievable PL/ safety category	Model	Stop category	Reset
PLe/4 equivalent	Safety Light Curtain F3SJ-B□□□□N25 Safety Relay Unit G9SA-301-P 24V DC Safety Relay G7SA Emergency Stop Switch A165E/A22E	0	Manual

Note: The above PL is only the evaluation result of the example. The PL must be evaluated in an actual application by the customer after confirming the usage conditions.

● Application Overview

- The power supply to the motor M is turned OFF when the beam is blocked.
- The power supply to the motor M is turned OFF when the emergency stop switch is pressed.
- The power supply to the motor M is kept OFF until the beams are unblocked and the reset switch S2 is pressed while the emergency stop switch is released.

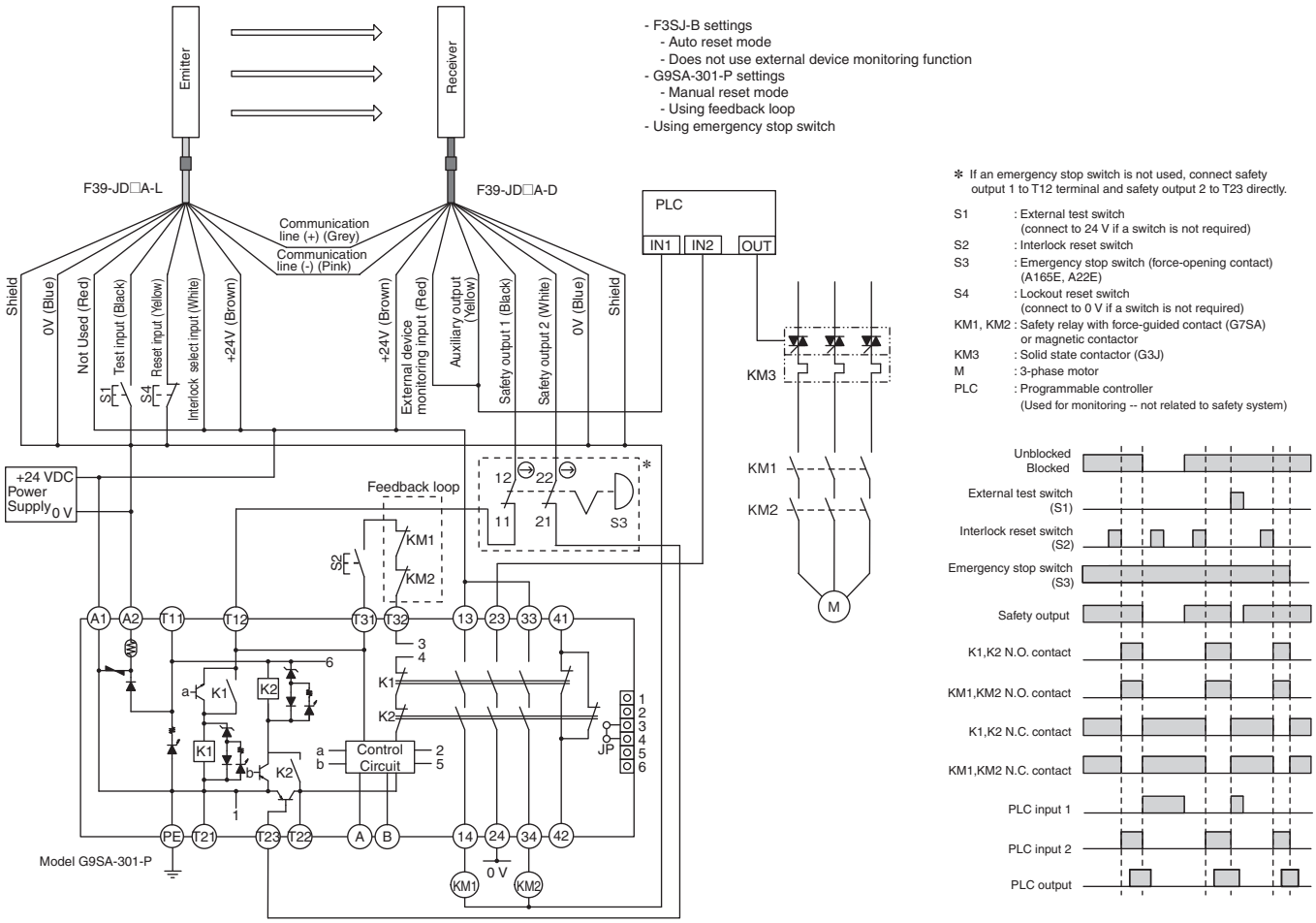

Note: 1. As the G9SP Safety Controller is a PNP output type, it cannot be connected to the F3SJ-B□□□□N25. Also, a Safety Controller with PNP output cannot be connected to the F3SJ-B□□□□N25.

2. The G9SA-301-P is a safety relay unit only for NPN output.

Dimensions

(Unit: mm)

The dimensions of the F3SJ-E and F3SJ-B are the same except for connector cables and cable leads.

Main Units

Mounting Top/Bottom and Intermediate Brackets

Backside mounting

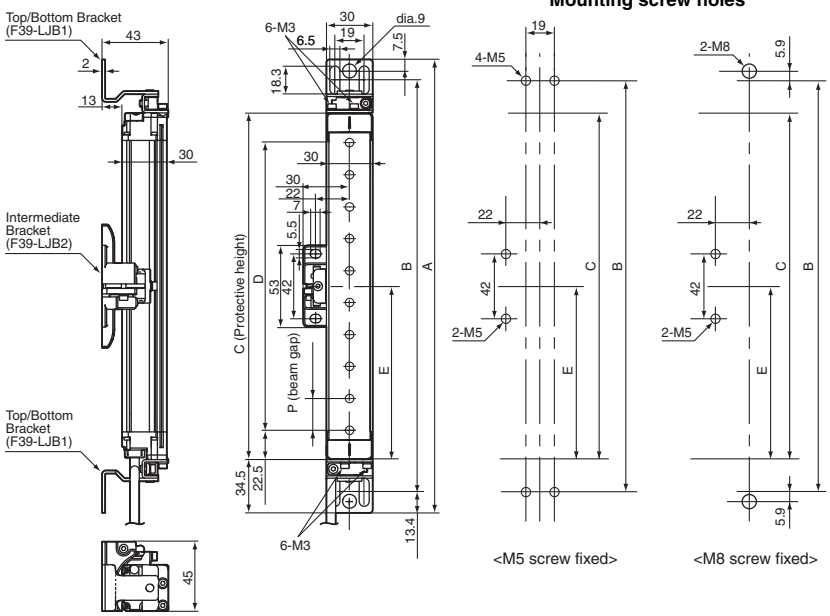

C (protective height): 4-digit number in the table
A = C + 69, B = C + 42.2
D = C - 45, E = See table below, P = 20

Protective height	Number of intermediate brackets	E
185 to 1,105	0	---
1,185 to 1,345	1	C/2 max.
1,425 to 2,065	2	C/3 max.

Side mounting

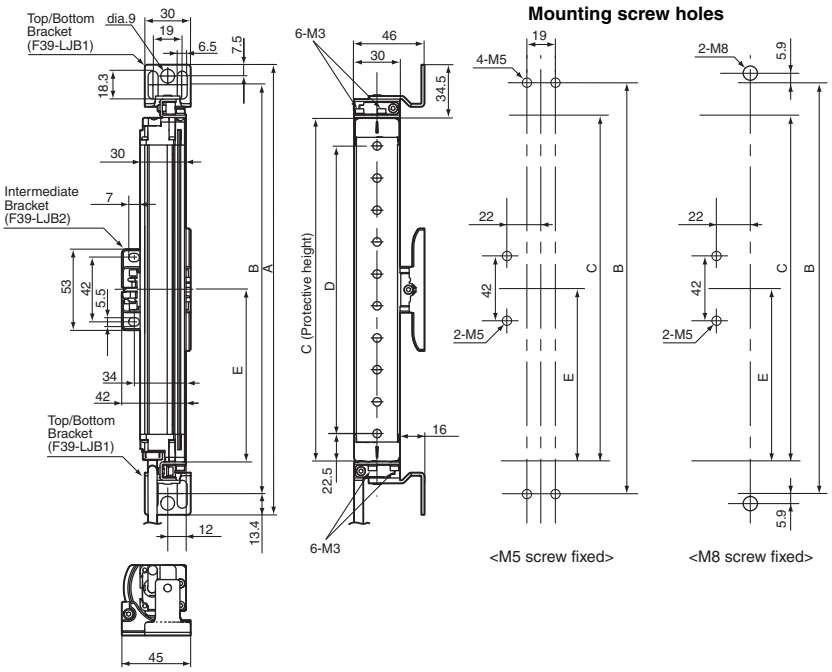

C (protective height): 4-digit number in the table
A = C + 69, B = C + 42.2
D = C - 45, E = See table below, P = 20

Protective height	Number of intermediate brackets	E
185 to 1,105	0	---
1,185 to 1,345	1	C/2 max.
1,425 to 2,065	2	C/3 max.

Dimensions of top/bottom bracket for F39-LJB1

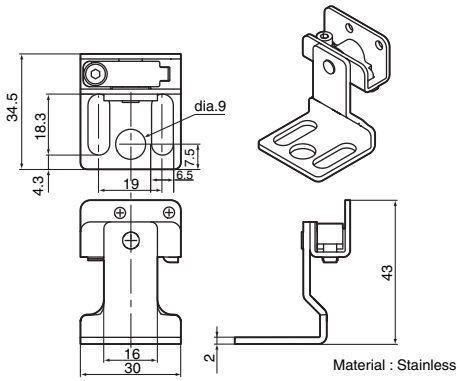

Mounting Intermediate Brackets only (location-free mounting)

Backside mounting

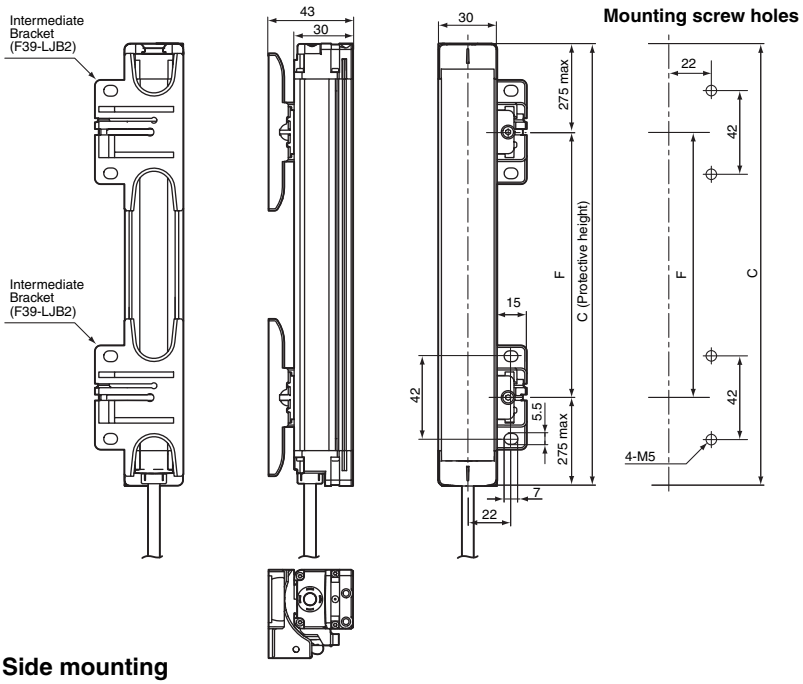

C (protective height): 4-digit number in the table
F = See the table below.

Protective height	Number of intermediate brackets	F
185 to 225	1	---
305 to 1,105	2	555 mm max.
1,185 to 1,585	3	555 mm max.
1,665 to 2,065	4	555 mm max.

Side mounting

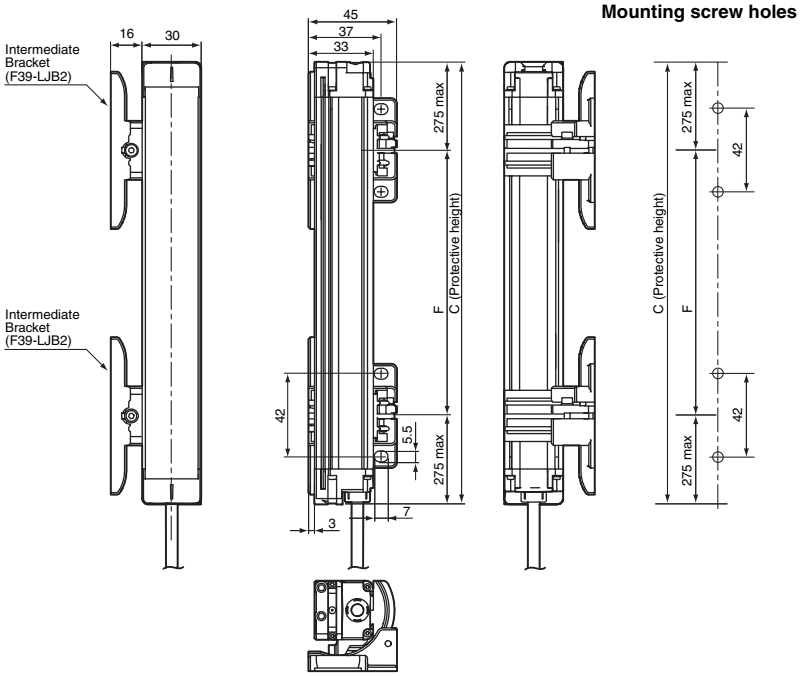

C (protective height): 4-digit number in the table
F = See the table below.

Protective height	Number of intermediate brackets	F
185 to 225	1	---
305 to 1,105	2	555 mm max.
1,185 to 1,585	3	555 mm max.
1,665 to 2,065	4	555 mm max.

Dimensions of intermediate bracket for F39-LJB2

Backside mounting

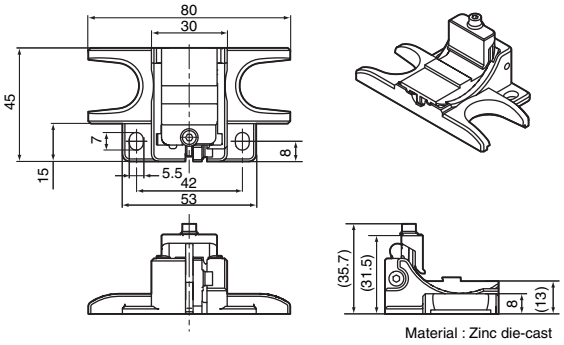

Material : Zinc die-cast

Side mounting

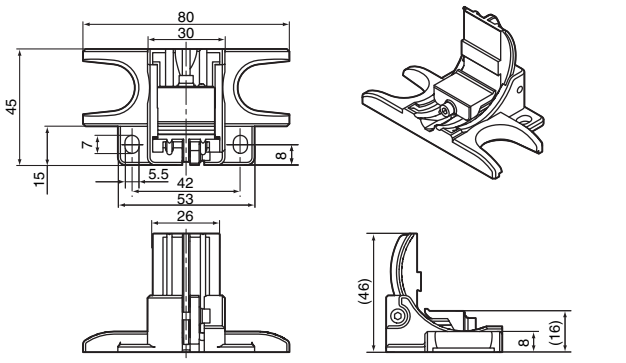

Material : Zinc die-cast

When Using One-touch Brackets

Backside mounting

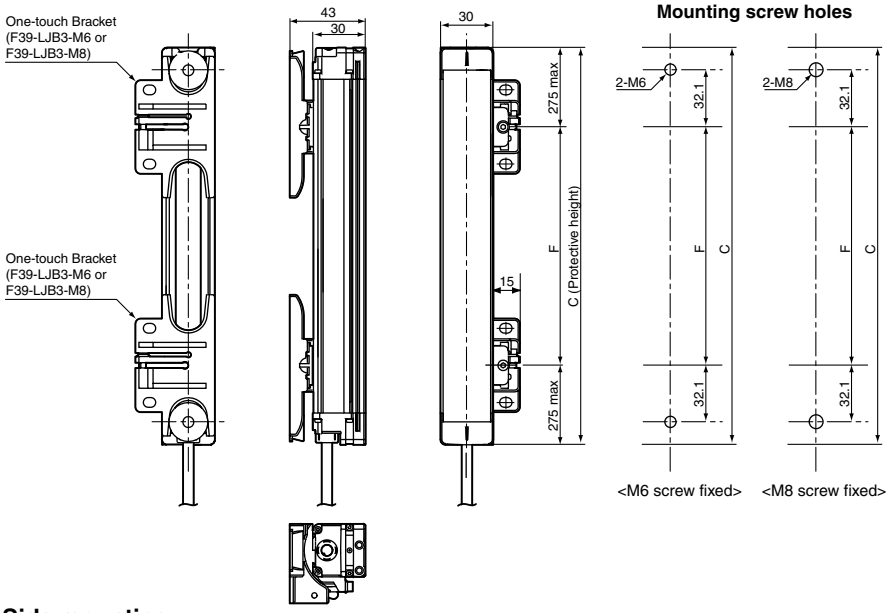

C (protective height): 4-digit number in the table
F = See the table below.

Protective height	Number of intermediate brackets	F
185 to 1,105	2	555 mm max.
1,185 to 1,585	3	555 mm max.
1,665 to 2,065	4	555 mm max.

Side mounting

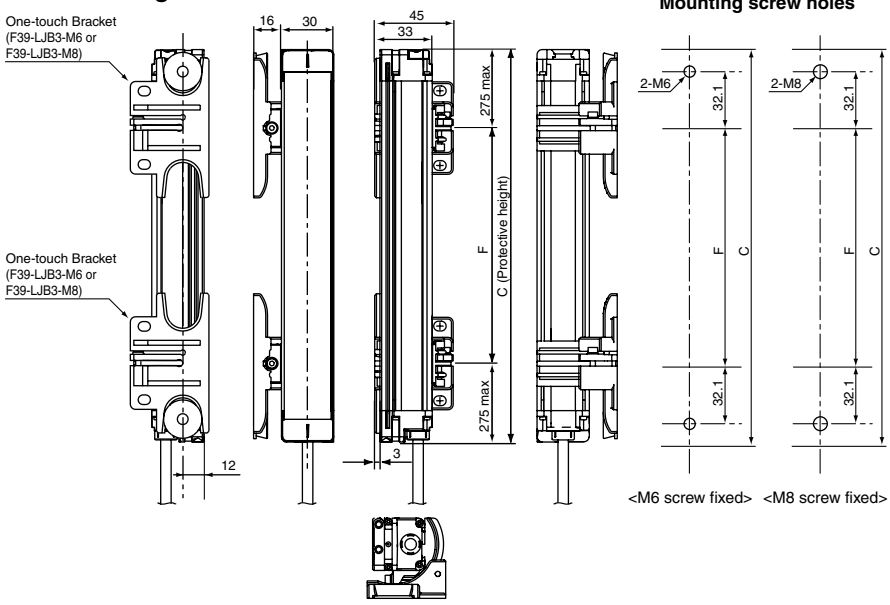

C (protective height): 4-digit number in the table
F = See the table below.

Protective height	Number of intermediate brackets	F
185 to 1,105	2	555 mm max.
1,185 to 1,585	3	555 mm max.
1,665 to 2,065	4	555 mm max.

Dimensions of one-touch bracket for F39-LJB3

Backside mounting

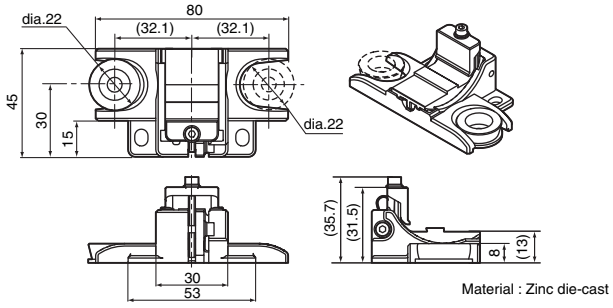

Material : Zinc die-cast

Side mounting

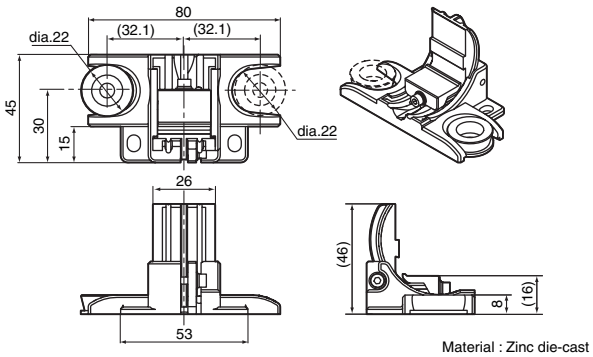

Material : Zinc die-cast

Dimensions of one-touch M6 bracket

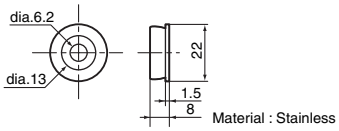

Material : Stainless

Dimensions of one-touch M8 bracket

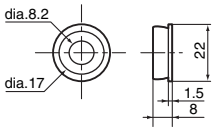

Material : Stainless

Precautions on mounting the sensor using One-touch Brackets

When using two One-touch Brackets to mount a sensor, the combination of One-touch M6 Bracket (or One-touch M8 Bracket) and Intermediate Bracket at the both ends of the sensor must be positioned opposite each other. When using three or more Brackets, One-touch M6 Brackets (or One-touch M8 Brackets) and Intermediate Brackets at other positions than the both ends must be in the same orientation.

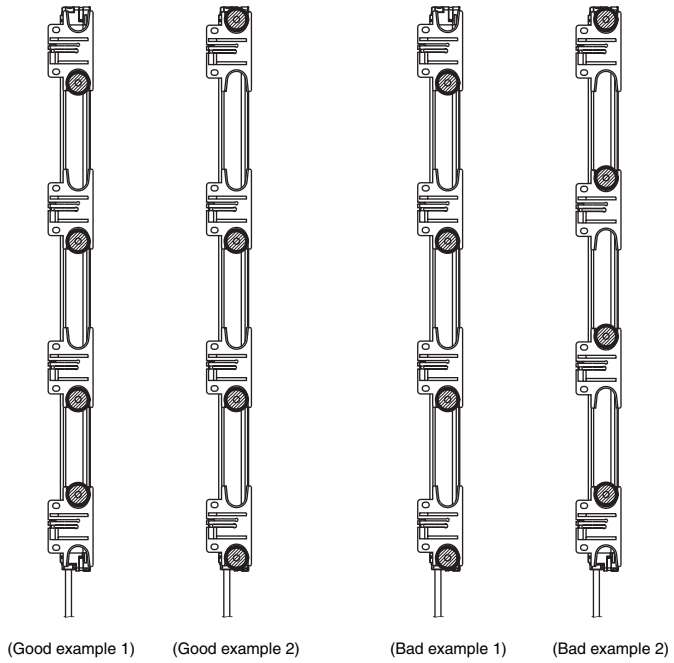

Mount One-touch M6 Brackets (or One-touch M8 Brackets) according to the mounting positions of the emitter and receiver. The positions of Intermediate Brackets mounted to the emitter and receiver must be aligned with each other.

Side view of the aluminum profile to be mounted

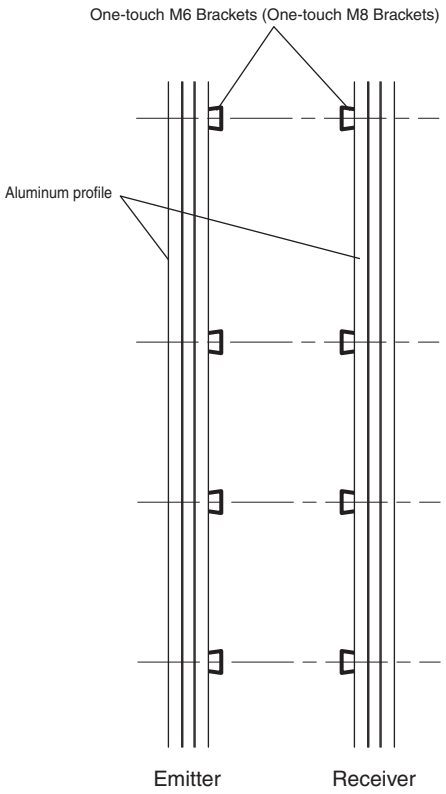

Position of the brackets to be mounted to the sensor

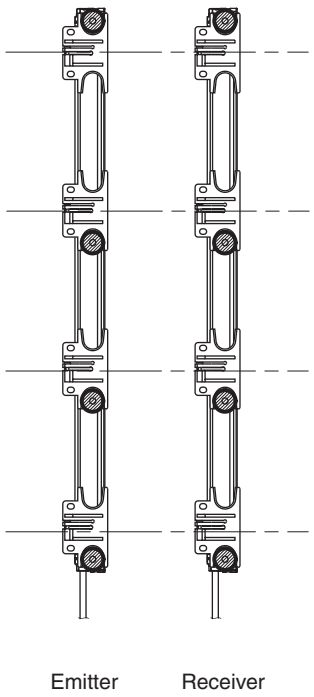

When Using Compatible Brackets

Backside mounting

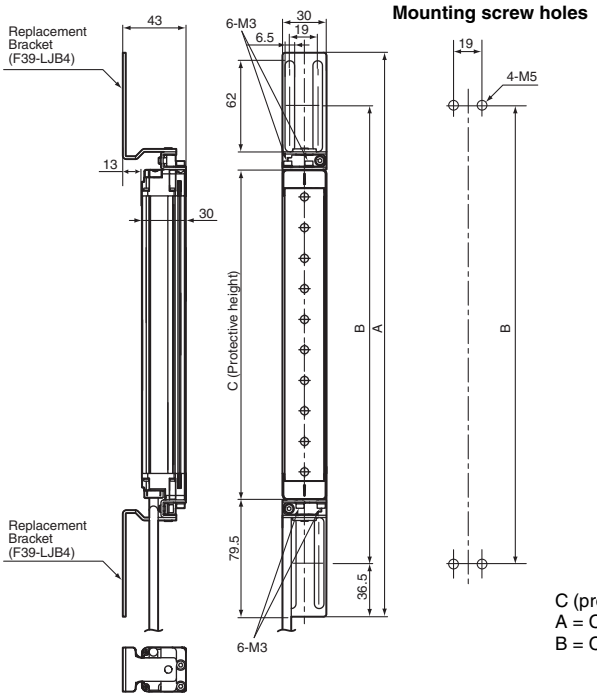

C (protective height): 4-digit number in the Model name
A = C + 159
B = C + 86

Side mounting

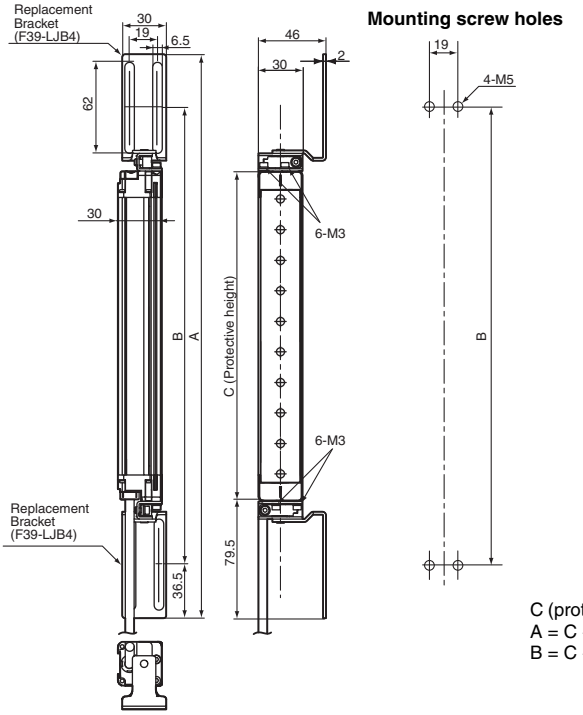

C (protective height): 4-digit number in the Model name
A = C + 159
B = C + 86

Dimensions of compatible bracket for F39-LJB4

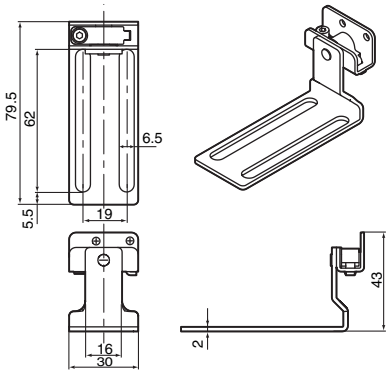

Material: Stainless

When Using Contact Mount Brackets

Backside mounting

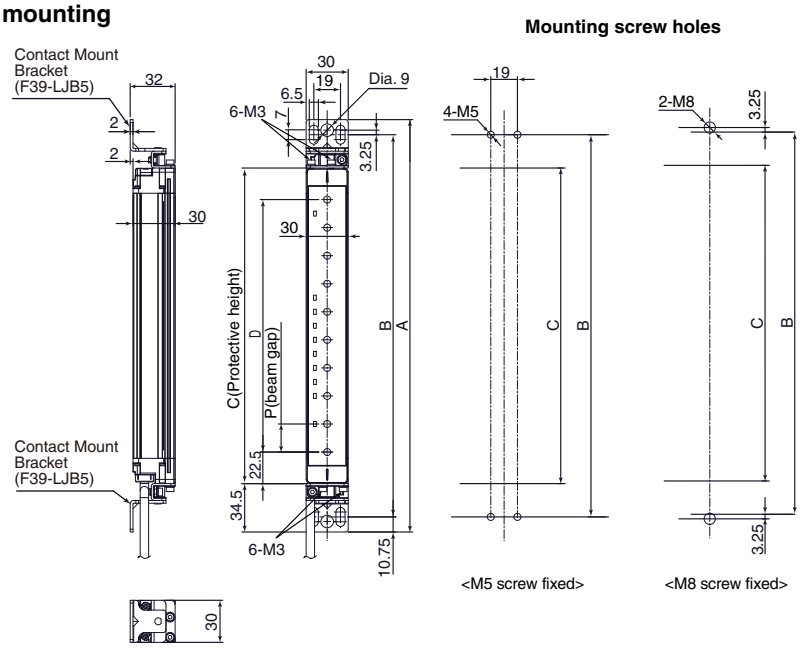

C (protective height): 4-digit number in the Model name
A = C + 69
B = C + 47.5
D = C - 45

Side mounting

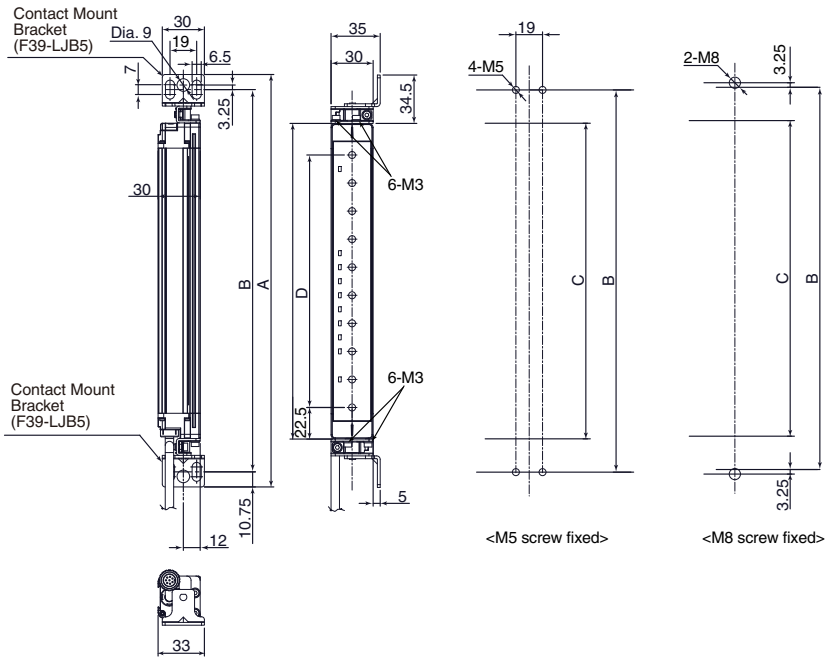

C (protective height): 4-digit number in the Model name
A = C + 69
B = C + 47.5
D = C - 45

Dimensions of F39-LJB5 contact mount bracket

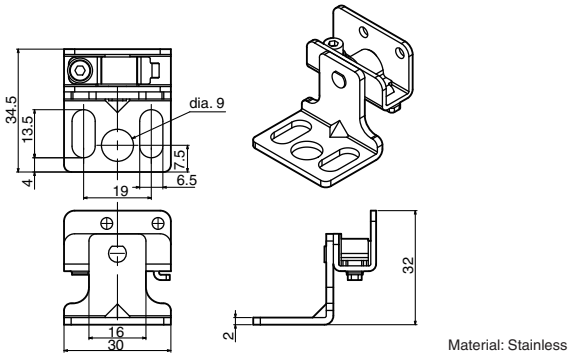

Note: 1. The protective height of the F3SJ-E/B series that supports the contact mount bracket is limited.
Protective height allowed for mounting: 185 mm to 1,105 mm (225 mm to 545 mm for the model with the suffix "-02TS")
2. Brackets of other models such as F39-LJB1 cannot be used simultaneously.

F3SJ-B□□□□P25-02TS

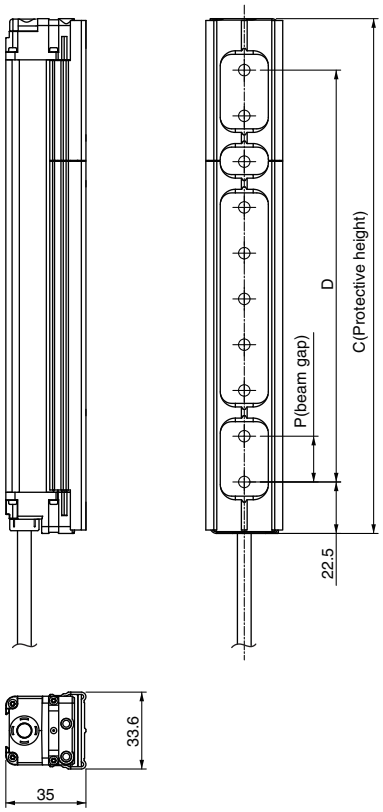

Note: For information on dimensions with brackets mounted, refer to the User's Manual of the F3SJ-B□□□□P25-02TS (SCHG-736). Brackets used are common to other F3SJ-E/B series.

Required number of intermediate brackets

The number of the brackets needed for the F3SJ-B□□□□P25-02TS differs from the other F3SJ-E/B series. The table below shows the number of brackets corresponding to the protective heights.

When using top/bottom bracket/compatible bracket + intermediate bracket

Protective height	Number of top/ bottom brackets /compatible brackets	Number of intermediate brackets
0225 to 0545	2	0
0625 to 1105	2	1
1185 to 1585	2	2
1665 to 1985	2	3

Using only the intermediate bracket (free-location mounting)

Protective height	Number of intermediate brackets
0225 to 0385	2
0465 to 0785	3
0865 to 1105	4
1185 to 1425	5
1505 to 1825	6
1905 to 1985	7

When using the one-touch bracket

Protective height	Number of one-touch bracket
0225 to 0385	2
0465 to 0785	3
0865 to 1105	4
1185 to 1425	5
1505 to 1825	6
1905 to 1985	7

Accessories

Single-Ended Cable F3SJ-B

F39-JD3A (L = 3 m)
F39-JD7A (L = 7 m)
F39-JD10A (L = 10 m)
F39-JD15A (L = 15 m)
F39-JD20A (L = 20 m)

Cable color: Gray for emitter and Black for receiver

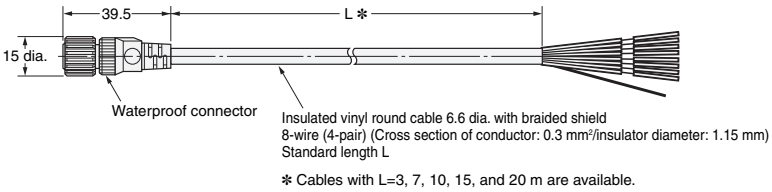

✻ Cables with L=3, 7, 10, 15, and 20 m are available.

Double-Ended Cable F3SJ-B

F39-JDR5B (L = 0.5 m)
F39-JD1B (L = 1 m)
F39-JD3 (L = 3 m)
F39-JD5 (L = 5 m)
F39-JD7B (L = 7 m)
F39-JD10B (L = 10 m)
F39-JD15B (L = 15 m)
F39-JD20B (L = 20 m)

Cable color: Gray for emitter and Black for receiver

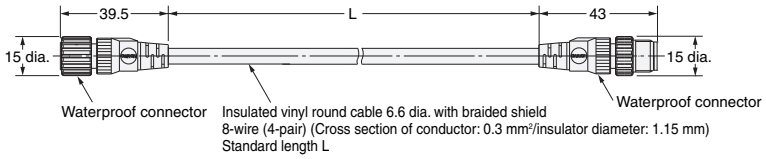

Simple Wiring Connector
F39-CN5

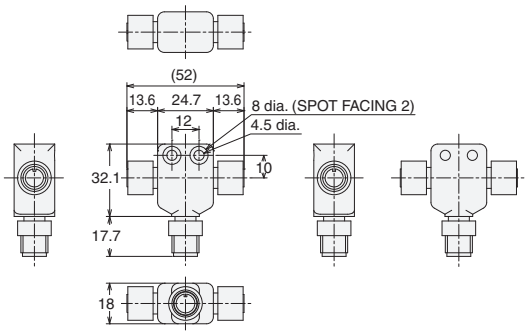

Control Unit F3SJ-B
F3SP-B1P

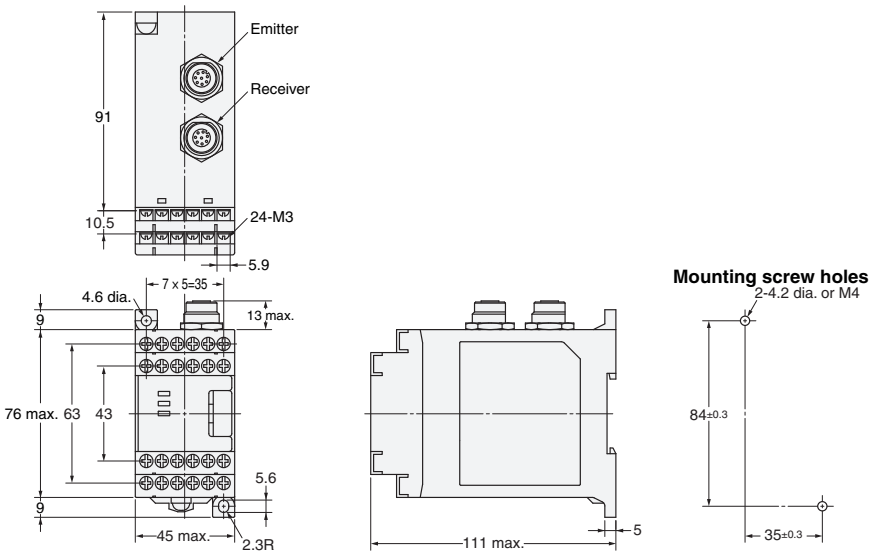

Laser Pointer F3SJ-E F3SJ-B
F39-PTJ

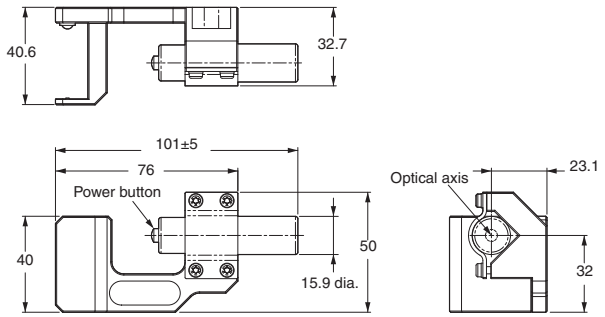

Spatter Protection Cover F3SJ-E F3SJ-B
F39-HB□□□□

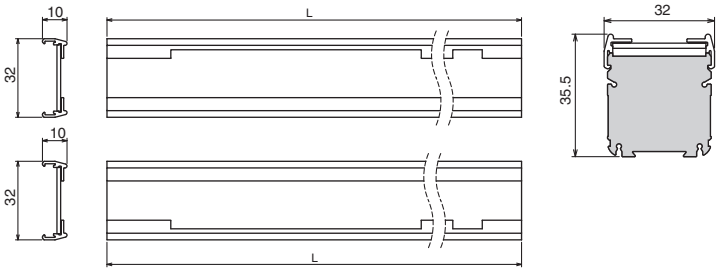

L = □□□□ - 21 mm

Material: PC (protective cover)

Mirrors
F39-MLG□

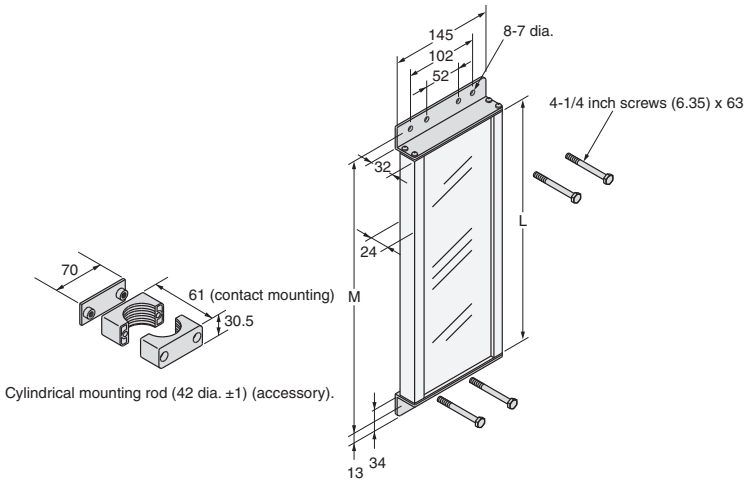

Model	L (mm)	M (mm)
F39-MLG0406	445	487
F39-MLG0610	648	690
F39-MLG0711	749	792
F39-MLG0914	953	995
F39-MLG1067	1,105	1,148
F39-MLG1219	1,257	1,300
F39-MLG1422	1,461	1,503
F39-MLG1626	1,664	1,706
F39-MLG1830	1,867	1,910
F39-MLG2134	2,172	2,214

Protective Bar F3SJ-E F3SJ-B

F39-PB□□□□

Backside mounting (using M5 screws)

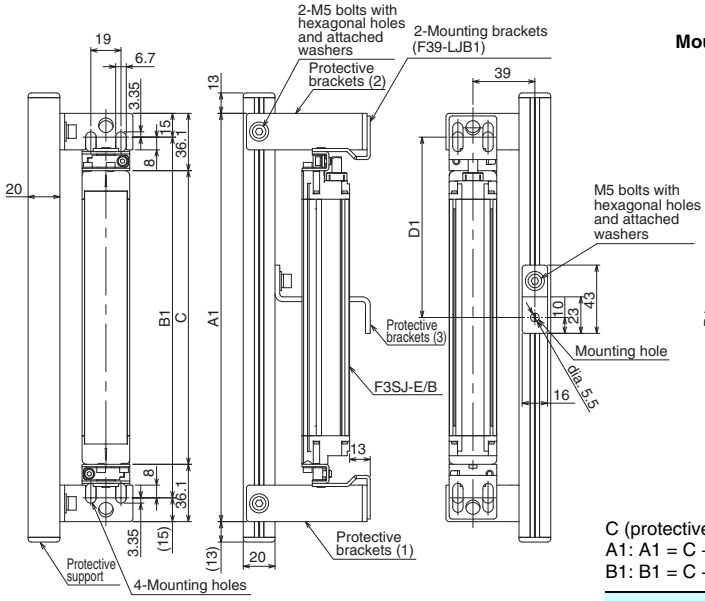

Mounting screw holes

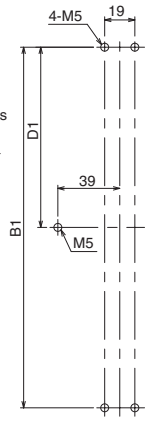

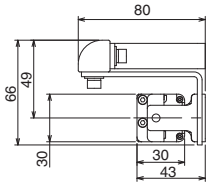

C (protective height): 4-digit number in the Model name
A1: A1 = C + 72.2
B1: B1 = C + 42.2

Protective height	Number of protective brackets (3) used	D1
0185 to 0945	0	---
1025 to 1985	1	B1/2
2065	2	B1/3

Note: For reference, D1 is the dimension that will not interfere with the intermediate bracket on the Safety Light Curtain body.

Backside mounting (using M8 screws)

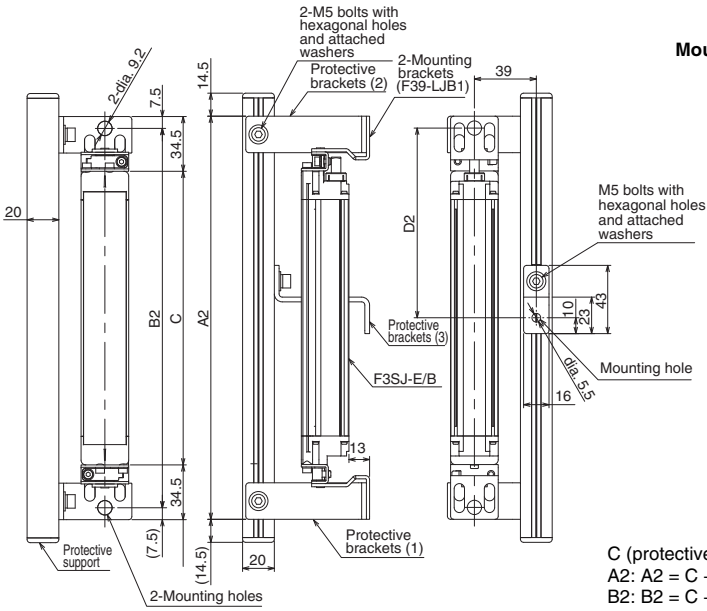

Mounting screw holes

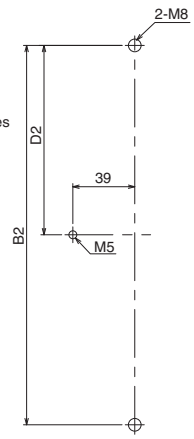

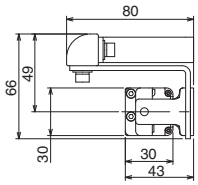

C (protective height): 4-digit number in the Model name
A2: A2 = C + 69
B2: B2 = C + 54

Protective height	Number of protective brackets (3) used	D2
0185 to 0945	0	---
1025 to 1985	1	B2/2
2065	2	B2/3

Note: For reference, D2 is the dimension that will not interfere with the intermediate bracket on the Safety Light Curtain body.

F39-PB□□□□

Side mounting (using M5 screws)

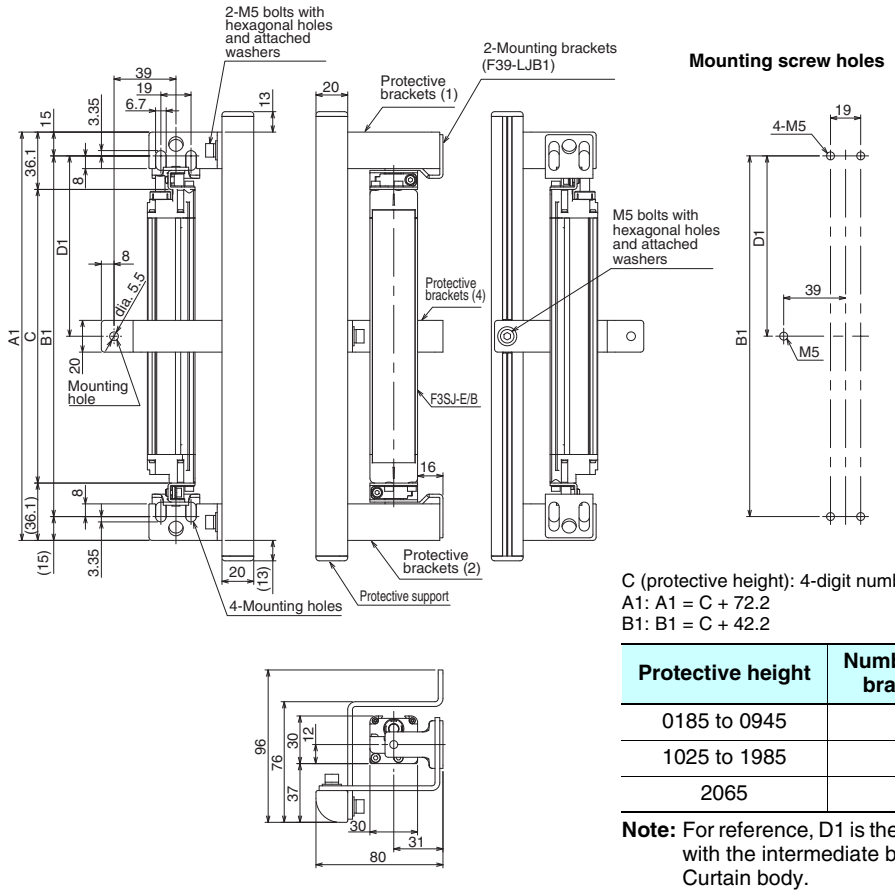

C (protective height): 4-digit number in the Model name
A1: A1 = C + 72.2
B1: B1 = C + 42.2

Protective height	Number of protective brackets (4) used	D1
0185 to 0945	0	---
1025 to 1985	1	B1/2
2065	2	B1/3

Note: For reference, D1 is the dimension that will not interfere with the intermediate bracket on the Safety Light Curtain body.

Side mounting (using M8 screws)

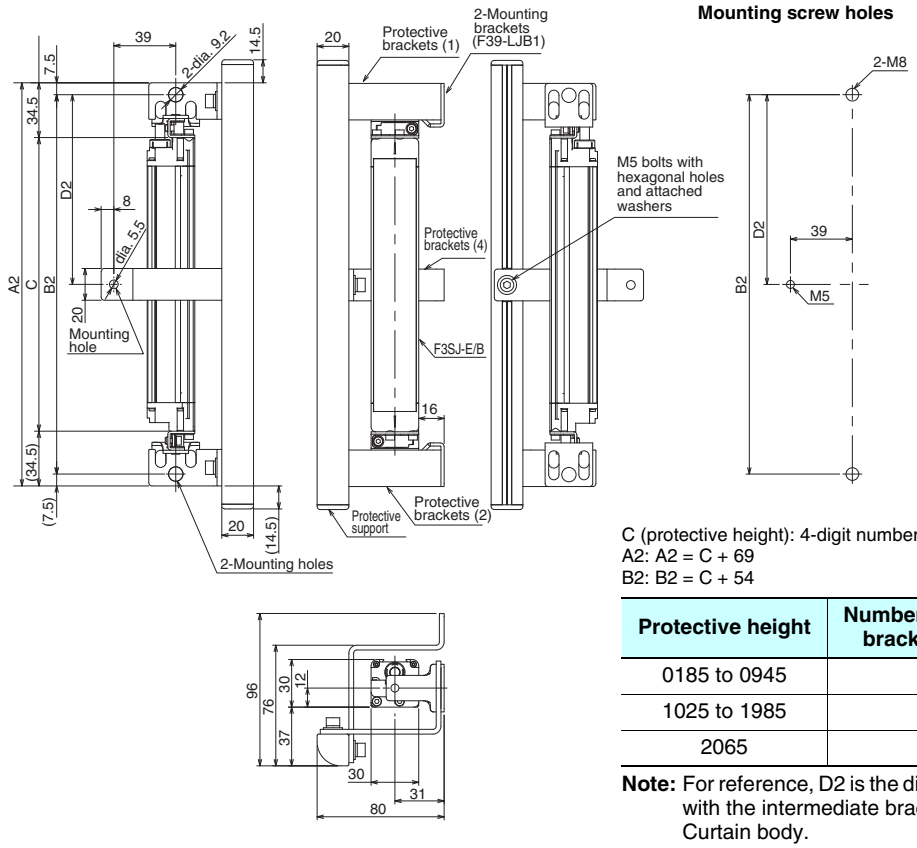

C (protective height): 4-digit number in the Model name
A2: A2 = C + 69
B2: B2 = C + 54

Protective height	Number of protective brackets (4) used	D2
0185 to 0945	0	---
1025 to 1985	1	B2/2
2065	2	B2/3

Note: For reference, D2 is the dimension that will not interfere with the intermediate bracket on the Safety Light Curtain body.

F3SJ-A

High-functional ADVANCED type supports finger protection and special applications.

- Detection capability supports finger protection.
- Equipped with wide variety of functions such as partial muting and blanking functions.
- The system status can be checked with PC tool.

Related information
Function List : Page 99 to 100
Safety Precautions : Page 101
Precautions on Safety : Page 102 to 107

Ordering Information

Main Units

Safety Light Curtain

Application	Detection capability	Beam gap	Operating range	Protective height (mm)	Model	
					PNP output	NPN output
Finger protection	Dia. 14 mm	9 mm	0.2 to 9 m	245 to 1,271	**F3SJ-A□□□□P14** ✻2	**F3SJ-A□□□□N14**
Hand protection	Dia. 20 mm	15 mm	0.2 to 9 m	245 to 1,505	**F3SJ-A□□□□P20** ✻2	**F3SJ-A□□□□N20**
Hand/arm protection	Dia. 30 mm	25 mm	0.2 to 9 m	245 to 1,620	**F3SJ-A□□□□P30** ✻1	**F3SJ-A□□□□N30**
			0.2 to 7 m	1,745 to 2,495		
Leg/body protection, presence detection	Dia. 55 mm	50 mm	0.2 to 9 m	270 to 1,570	**F3SJ-A□□□□P55** ✻1	**F3SJ-A□□□□N55**
			0.2 to 7 m	1,670 to 2,470		

Note: Connection cables are not included in the products. You must purchase optional connector cable.
✻1. Models with S-mark certification have an "-S" at the end of the model number.
Example: F3SJ-A0245P30-S
✻2. The F3SJ-A-□□□□-TS series with the suffix "-TS" are auto reset fixed models. Function settings using the setting console F39-MC21 or PC tool F39-GWUM for F3SJ cannot be performed.
(Models with ditection capability 25 mm dia. are also available.)

Safety Light Curtain Model List

F3SJ-A14 Series (9 mm gap)

Model		Number of Beams	Protective Height (mm) ✻
PNP Output	NPN Output		
F3SJ-A0245P14	F3SJ-A0245N14	26	245
F3SJ-A0263P14	F3SJ-A0263N14	28	263
F3SJ-A0299P14	F3SJ-A0299N14	32	299
F3SJ-A0317P14	F3SJ-A0317N14	34	317
F3SJ-A0389P14	F3SJ-A0389N14	42	389
F3SJ-A0461P14	F3SJ-A0461N14	50	461
F3SJ-A0551P14	F3SJ-A0551N14	60	551
F3SJ-A0623P14	F3SJ-A0623N14	68	623
F3SJ-A0695P14	F3SJ-A0695N14	76	695
F3SJ-A0731P14	F3SJ-A0731N14	80	731
F3SJ-A0803P14	F3SJ-A0803N14	88	803
F3SJ-A0875P14	F3SJ-A0875N14	96	875
F3SJ-A0983P14	F3SJ-A0983N14	108	983
F3SJ-A1055P14	F3SJ-A1055N14	116	1,055
F3SJ-A1127P14	F3SJ-A1127N14	124	1,127
F3SJ-A1199P14	F3SJ-A1199N14	132	1,199
F3SJ-A1271P14	F3SJ-A1271N14	140	1,271

✻Protective Height (mm) = Total sensor length

F3SJ-A20 Series (15 mm gap)

Model		Number of Beams	Protective Height (mm) ✻
PNP Output	NPN Output		
F3SJ-A0245P20	F3SJ-A0245N20	16	245
F3SJ-A0275P20	F3SJ-A0275N20	18	275
F3SJ-A0305P20	F3SJ-A0305N20	20	305
F3SJ-A0395P20	F3SJ-A0395N20	26	395
F3SJ-A0455P20	F3SJ-A0455N20	30	455
F3SJ-A0545P20	F3SJ-A0545N20	36	545
F3SJ-A0605P20	F3SJ-A0605N20	40	605
F3SJ-A0635P20	F3SJ-A0635N20	42	635
F3SJ-A0695P20	F3SJ-A0695N20	46	695
F3SJ-A0785P20	F3SJ-A0785N20	52	785
F3SJ-A0815P20	F3SJ-A0815N20	54	815
F3SJ-A0875P20	F3SJ-A0875N20	58	875
F3SJ-A0935P20	F3SJ-A0935N20	62	935
F3SJ-A1025P20	F3SJ-A1025N20	68	1,025
F3SJ-A1115P20	F3SJ-A1115N20	74	1,115
F3SJ-A1205P20	F3SJ-A1205N20	80	1,205
F3SJ-A1265P20	F3SJ-A1265N20	84	1,265
F3SJ-A1445P20	F3SJ-A1445N20	96	1,445
F3SJ-A1505P20	F3SJ-A1505N20	100	1,505

✻Protective Height (mm) = Total sensor length

F3SJ-A30 Series (25 mm gap)

Model		Number of Beams	Protective Height (mm) ✻
PNP Output	NPN Output		
F3SJ-A0245P30	F3SJ-A0245N30	10	245
F3SJ-A0295P30	F3SJ-A0295N30	12	295
F3SJ-A0395P30	F3SJ-A0395N30	16	395
F3SJ-A0470P30	F3SJ-A0470N30	19	470
F3SJ-A0520P30	F3SJ-A0520N30	21	520
F3SJ-A0545P30	F3SJ-A0545N30	22	545
F3SJ-A0570P30	F3SJ-A0570N30	23	570
F3SJ-A0620P30	F3SJ-A0620N30	25	620
F3SJ-A0720P30	F3SJ-A0720N30	29	720
F3SJ-A0795P30	F3SJ-A0795N30	32	795
F3SJ-A0870P30	F3SJ-A0870N30	35	870
F3SJ-A0920P30	F3SJ-A0920N30	37	920
F3SJ-A0945P30	F3SJ-A0945N30	38	945
F3SJ-A0995P30	F3SJ-A0995N30	40	995
F3SJ-A1020P30	F3SJ-A1020N30	41	1,020
F3SJ-A1095P30	F3SJ-A1095N30	44	1,095
F3SJ-A1120P30	F3SJ-A1120N30	45	1,120
F3SJ-A1195P30	F3SJ-A1195N30	48	1,195
F3SJ-A1270P30	F3SJ-A1270N30	51	1,270
F3SJ-A1395P30	F3SJ-A1395N30	56	1,395
F3SJ-A1620P30	F3SJ-A1620N30	65	1,620
F3SJ-A1745P30	F3SJ-A1745N30	70	1,745
F3SJ-A1870P30	F3SJ-A1870N30	75	1,870
F3SJ-A1995P30	F3SJ-A1995N30	80	1,995
F3SJ-A2245P30	F3SJ-A2245N30	90	2,245
F3SJ-A2370P30	F3SJ-A2370N30	95	2,370
F3SJ-A2495P30	F3SJ-A2495N30	100	2,495

✻Protective Height (mm) = Total sensor length

F3SJ-A55 Series (50 mm gap)

Model		Number of Beams	Protective Height (mm) ✻
PNP Output	NPN Output		
F3SJ-A0270P55	F3SJ-A0270N55	6	270
F3SJ-A0320P55	F3SJ-A0320N55	7	320
F3SJ-A0370P55	F3SJ-A0370N55	8	370
F3SJ-A0470P55	F3SJ-A0470N55	10	470
F3SJ-A0570P55	F3SJ-A0570N55	12	570
F3SJ-A0620P55	F3SJ-A0620N55	13	620
F3SJ-A0720P55	F3SJ-A0720N55	15	720
F3SJ-A0770P55	F3SJ-A0770N55	16	770
F3SJ-A0870P55	F3SJ-A0870N55	18	870
F3SJ-A0920P55	F3SJ-A0920N55	19	920
F3SJ-A0970P55	F3SJ-A0970N55	20	970
F3SJ-A1020P55	F3SJ-A1020N55	21	1,020
F3SJ-A1120P55	F3SJ-A1120N55	23	1,120
F3SJ-A1170P55	F3SJ-A1170N55	24	1,170
F3SJ-A1270P55	F3SJ-A1270N55	26	1,270
F3SJ-A1320P55	F3SJ-A1320N55	27	1,320
F3SJ-A1420P55	F3SJ-A1420N55	29	1,420
F3SJ-A1570P55	F3SJ-A1570N55	32	1,570
F3SJ-A1770P55	F3SJ-A1770N55	36	1,770
F3SJ-A1920P55	F3SJ-A1920N55	39	1,920
F3SJ-A2070P55	F3SJ-A2070N55	42	2,070
F3SJ-A2220P55	F3SJ-A2220N55	45	2,220
F3SJ-A2370P55	F3SJ-A2370N55	48	2,370
F3SJ-A2470P55	F3SJ-A2470N55	50	2,470

✻Protective Height (mm) = Total sensor length

Accessories (Sold separately)

Single-Ended Cable (2 cables per set, one for emitter and one for receiver) ✻

For wiring with safety circuit such as single safety relay, safety relay unit, and safety controller

Appearance	Cable length	Specifications	Model
	3 m	M12 connector (8-pin)	**F39-JD3A**
	7 m		**F39-JD7A**
	10 m		**F39-JD10A**
	15 m		**F39-JD15A**
	20 m		**F39-JD20A**

✻ The cable for emitter and the cable for receiver are available separately. Add '-L' for emitter or '-D' for receiver to the end of the model number when you order.
Single-Ended Cable for Emitter: F39-JD□A-L, Single-Ended Cable for Receiver: F39-JD□A-D

Note: To extend the cable length to 20 m or more, add the F39-JD□B Double-Ended Cable.
Example: When using a cable of 30 m, connect the F39-JD10A Single-Ended Cable with the F39-JD20B Double-Ended Cable.

Double-Ended Cable (2 cables per set, one for emitter and one for receiver) ✻

Control unit for connection with F3SP-B1P, to extend the length under series connection (✻)

Appearance	Cable length	Specifications	Model
	0.5 m	M12 connector (8-pin)	**F39-JDR5B**
	1 m		**F39-JD1B**
	3 m		**F39-JD3B**
	5 m		**F39-JD5B**
	7 m		**F39-JD7B**
	10 m		**F39-JD10B**
	15 m		**F39-JD15B**
	20 m		**F39-JD20B**

✻ The cable for emitter and the cable for receiver are available separately. Add '-L' for emitter or '-D' for receiver to the end of the model number when you order.
Double-Ended Cable for Emitter: F39-JD□B-L, Double-Ended Cable for Receiver: F39-JD□B-D

Note: To extend the cable length to 20 m or more, use the Double-Ended Cables in combination.
Example: When using a cable of 30 m, connect the F39-JD10B Double-Ended Cable with the F39-JD20B Double-Ended Cable.

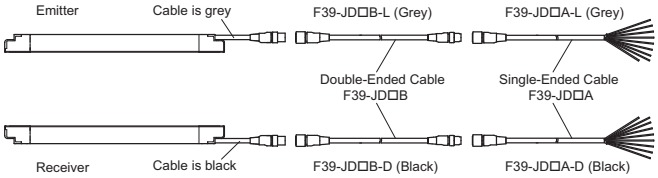

Power cable (included in the main unit. 2 cables per set, one for emitter and one for receiver)

Appearance	Cable Length	Model
	0.3 m	**F39-JJR3K**

Note: This product is for F3SJ-A only.

Series-connection Cable (2 cables per set, for emitter and receiver)

Type	Appearance	Cable Length	Model	Application
Series connection cable		0.3 m	**F39-JJR3W ✻1**	For series connection **✻2** When using the Water-resistant Case. **✻3**
Side-by-side Series connection cable		0.06 m	**F39-JJR06L ✻1**	Dedicated cable to materialize series connection with minimum length without connector cable of the main sensor unit
		0.15 m	**F39-JJR15L ✻1**	

✻1. This product is for F3SJ-A only.
✻2. For series connection with minimum length, use F39-JJR06L or F39-JJR15L.
✻3. When using the F39-EJ□□□□-L/D Water-resistant Case in series connection configurations, use the special series connection cables for the Water-resistant Case. Refer to page 73 for details.

Note: The Double-Ended Cable (up to 15 m: F39-JD15B) can be added to extend the cable length between the series-connected sensors.
Cable length between sensors: 15 m max. (not including series connection cable (F39-JJR3W or F39-JJR□L) and power cable)

<Connection example>

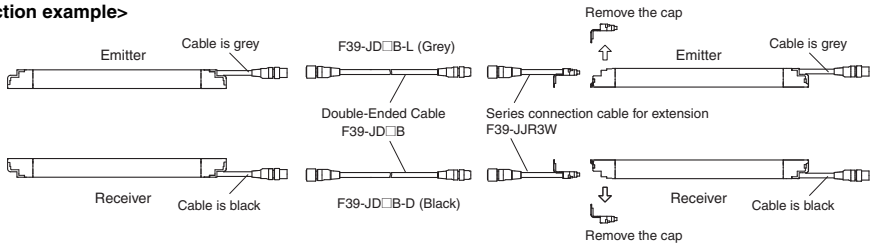

Simple wiring connector system
(Order the F39-CN5 and Cables for Simple Wiring.)

Simple wiring connector

Appearance	Model	Application
	F39-CN5	To reduce wiring

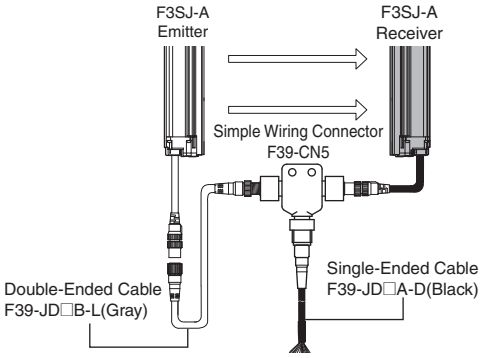

Cable for simple wiring ✻ (2 cables per set, one double-ended cable and one single-ended cable)

Appearance	Contents		Cable length	Model
	Double-Ended Cable	F39-JD3B-L	3 m	**F39-JD0303BA**
	Single-Ended Cable	F39-JD3A-D	3 m	
	Double-Ended Cable	F39-JD3B-L	3 m	**F39-JD0307BA**
	Single-Ended Cable	F39-JD7A-D	7 m	
	Double-Ended Cable	F39-JD3B-L	3 m	**F39-JD0310BA**
	Single-Ended Cable	F39-JD10A-D	10 m	
	Double-Ended Cable	F39-JD5B-L	5 m	**F39-JD0503BA**
	Single-Ended Cable	F39-JD3A-D	3 m	
	Double-Ended Cable	F39-JD5B-L	5 m	**F39-JD0507BA**
	Single-Ended Cable	F39-JD7A-D	7 m	
	Double-Ended Cable	F39-JD5B-L	5 m	**F39-JD0510BA**
	Single-Ended Cable	F39-JD10A-D	10 m	
	Double-Ended Cable	F39-JD10B-L	10 m	**F39-JD1003BA**
	Single-Ended Cable	F39-JD3A-D	3 m	
	Double-Ended Cable	F39-JD10B-L	10 m	**F39-JD1007BA**
	Single-Ended Cable	F39-JD7A-D	7 m	
	Double-Ended Cable	F39-JD10B-L	10 m	**F39-JD1010BA**
	Single-Ended Cable	F39-JD10A-D	10 m	

Note: A double-ended cable and single-ended cable with other cable lengths than those listed above can also be used in combination. Please contact your OMRON sales representative for details.

✻Although the double-ended cable for the emitter is used for the emitter in the above figure, it can also be used for the receiver.

Relays with Forcibly Guided Contacts

Type	Appearance	Specifications	Model	Remarks
G7SA Relays with Forcibly Guided Contacts		• Nodes: 4 • Contact type: 2A2B • Rated switch load: 250 VAC 6 A, 30 VDC 6 A	**G7SA-2A2B**	For details on other models or socket models, refer to the OMRON's website.
		• Nodes: 4 • Contact type: 3NO+1NC • Rated switch load: 250 VAC 6 A, 30 VDC 6 A	**G7SA-3A1B**	
G7S-□-E Relays with Forcibly Guided Contacts		• Nodes: 6 • Contact type: 4NO+2NC • Rated switch load: 250 VAC 10 A, 30 VDC 10 A	**G7S-4A2B-E**	For details on other models or socket models, refer to the OMRON's website.
		• Nodes: 6 • Contact type: 3NO+3NC • Rated switch load: 250 VAC 10 A, 30 VDC 10 A	**G7S-3A3B-E**	

Control Unit (Can not be used as a muting system)
(Dedicated PNP output type) ✻

Appearance	Output	Model	Remarks
	Relay, 3NO+1NC	**F3SP-B1P ✻**	For connection with F3SJ-A, use a double-ended cable F39-JD□B.

✻F3SJ for NPN output type cannot be connected.

Wire-saving Devices

Type	Appearance	Specifications	Model	Remarks
Connector Terminal Box/ Muting Terminals		Model with PNP Muting Sensor Output	**F39-TC5P01**	Significantly reduces amount of wiring between Safety Light Curtains and Muting Sensors. IP67 model for mounting at Sensor installation site. For details, refer to the OMRON's website.
		Model with PNP Override Input	**F39-TC5P02**	
		Model with NPN Muting Sensor Output	**F39-TC5N01**	
		Model with NPN Override Input	**F39-TC5N02**	
Safety Terminal Relays	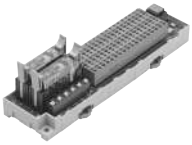	PNP output relay, SPDT-NO	**F3SP-T01 ✻**	Significantly reduces amount of wiring between Safety Light Curtains and Muting Sensors. For details, refer to the OMRON's website.

✻F3SJ for NPN output type cannot be connected.

Laser Pointer

Appearance	Output	Model
	Laser Pointer for F3SJ	**F39-PTJ**

Dedicated External Indicator Set (can be connected to either an emitter or a receiver)

Appearance	Color	Model	Remarks
	Red	**F39-A01PR-PAC**	Indicator (red), mounting bracket 1 set, and dedicated connection cable (0.1 m)
	Green	**F39-A01PG-PAC**	Indicator (green), mounting bracket 1 set, and dedicated connection cable (0.1 m)
	Yellow	**F39-A01PY-PAC**	Indicator (yellow), mounting bracket 1 set, and dedicated connection cable (0.1 m)

Note: 1. For indication timing (operation mode), see *"Specifications"* on page 74.
2. This product is for F3SJ-A only.

General External Indicator Cable

Appearance	Cable Length	Specifications	Model
	3 m	Cable to connect top of the main unit and an off-the-shelf external indicator (2-wire)	**F39-JJ3N ✻**

✻This product is for F3SJ-A only.

Spatter Protection Cover (2 cables per set, one for emitter and one for receiver) (10% Operating Range Attenuation)

Appearance	Model
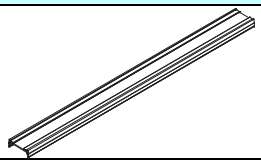	**F39-HJ□□□□** **✻1 ✻2**

✻1. This product is for F3SJ-A only.
✻2. The same 4-digit numbers as the protective heights (□□□□ in the light curtain model names) are substituted by in the model names.

Mirrors (12% Operating Range Attenuation)

Appearance	Mirror material	Width (mm)	Thickness (mm)	Length (mm)	Model	Remarks
	Glass mirror	145	32	406	**F39-MLG0406**	2 sets of cylinder mounting brackets and 4 screws are included.
				610	**F39-MLG0610**	
				711	**F39-MLG0711**	
				914	**F39-MLG0914**	
				1,067	**F39-MLG1067**	
				1,219	**F39-MLG1219**	
				1,422	**F39-MLG1422**	
				1,626	**F39-MLG1626**	
				1,830	**F39-MLG1830**	
				2,134	**F39-MLG2134**	

Test rod (Sold separately)

Diameter	Model
14mm dia.	**F39-TRD14**
20mm dia.	**F39-TRD20**
25mm dia.	**F39-TRD25**
30mm dia.	**F39-TRD30**

Sensor Mounting Brackets (Sold separately)

Appearance	Specifications	Model	Application	Remarks
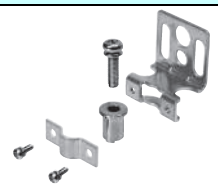	Standard mounting bracket (for top/bottom)	**F39-LJ1**	(provided with the F3SJ)	2 for an emitter, 2 for a receiver, total of 4 per set
	Flat side mounting bracket	**F39-LJ2**	Use these small-sized brackets when performing side mounting with standard mounting brackets, so that they do not protrude from the detection surface.	2 for an emitter, 2 for a receiver, total of 4 per set
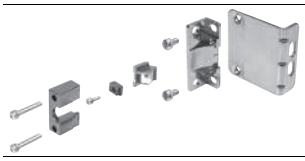	Free-location mounting bracket (also used as standard intermediate bracket)	**F39-LJ3**	Use these brackets for mounting on any place without using standard bracket.	Two brackets per set (For details about the number of required brackets, refer to page 89.)
	F3SN Intermediate Bracket Replacement Spacers	**F39-LJ3-SN**	When replacing the F3SN with the F3SJ, the mounting hole pitches in the Intermediate Brackets are not the same. This Spacer is placed between the mounting holes to mount the F3SJ.	1 set with 2 pieces
	Top/bottom bracket B (Mounting hole pitch 19 mm)	**F39-LJ4**	Mounting bracket used when replacing existing area sensors (other than F3SN or F3WN) with the F3SJ. For front mounting. Suitable for mounting hole pitch of 18 to 20 mm.	2 for an emitter, 2 for a receiver, total of 4 per set
	Bracket for replacing short-length F3SN	**F39-LJ5**	Mounting bracket used when an F3SN with protective height of 300 mm or less is replaced by an F3SJ.	2 for an emitter, 2 for a receiver, total of 4 per set
	Space-saving mounting bracket	**F39-LJ8**	Use these brackets to mount facing inward. Length is 12 mm shorter than the standard F39-LJ1 bracket.	2 for an emitter, 2 for a receiver, total of 4 per set
	Mounting bracket used when replacing an F3W-C.	**F39-LJ9**	Mounting bracket used when replacing existing F3W-C series area sensors with the F3SJ. For front mounting or side mounting. Mounting hole pitch 16 mm.	2 for an emitter, 2 for a receiver, total of 4 per set
	Top/bottom bracket C (mounting hole pitch 13 mm)	**F39-LJ11**	Mounting bracket used when replacing existing area sensors having a mounting pitch of 13 mm with the F3SJ.	2 for an emitter, 2 for a receiver, total of 4 per set

End Cap

Appearance	Model	Remarks
	F39-CN9 ✻	For both emitter and receiver. The End Cap can be purchased if lost. (Case: Black)

✻This product is for F3SJ-A only.

Key Cap for Muting

Appearance	Model	Remarks
	F39-CN6 ✻	A cap to be attached to the main unit to enable muting function. Attach it to either an emitter or a receiver.(Case: orange)

✻This product is for F3SJ-A only.

Setting Tools ✻1

Type	Appearance	Model	Remarks
"SD Manager" Setting Support Software for the F3SJ		**F39-GWUM ✻2**	Accessories: SD Manager CD-ROM (1), F39-CN1 Branch Connector (1), Connector Cap (1), 2-m Dedicated Cable (1), 0.3-m Dedicated Cable with Plug (1), Instruction Manual
Setting Console		**F39-MC21 ✻3**	Accessories: F39-CN1 Branch Connector (1), Connector Cap (1), 2-m Dedicated Cable (1), 0.3-m Dedicated Cable with Plug (1), Instruction Manual

✻1. The setting tools described above can be connected only to F3SJ-A models with built-in software of Ver. 2 or later.
Note that the setting tools cannot be used with products shipped prior to December 2005.
The setting tools cannot be used for setting parameters on the F3SJ-A□-TS series, but the monitoring function can be used.
✻2. The PC tool supports Windows XP/7.
✻3. This product is for use only with the F3SJ-A.It cannot be connected to conventional models of the F3SJ-E/B or F3SN-A series.
Similarly, the F39-MC11 and F39-MT11 Dedicated Consoles for the F3SN-A cannot be connected to the F3SJ-A series.

Protective Bar ✻1 ✻2

Type	Appearance	Model	Remarks
Protective Bar		**F39-PJ□□□□-S ✻3**	Main unit bracket (1), rear mounting brackets (2), including intermediate brackets to match protective height (0 to 2).
Intermediate brackets for side mounting		**F39-PJ-MS**	For side mounting, order to suit the desired protective height. Protective height of up to 1,000 mm: 0 intermediate brackets Protective height of 1,001 to 2,000 mm: 1 intermediate bracket Protective height of 2,001 mm or more: 2 intermediate brackets

✻1. This product is for F3SJ-A only.
✻2. When using for both emitter and receiver, order two sets.
✻3. The same four digits indicating protective height that are used in the Sensor model number (□□□□) are used in the part of the Protector model number.

Water-resistant Case (Set of 1 tube, packing, and dedicated connector cable) ✻1 ✻2 ✻3

Appearance	Specifications	Model	Remarks
	For emitter	**F39-EJ□□□□-L ✻4**	Includes gray cable for emitter.
	For receiver	**F39-EJ□□□□-D ✻4**	Includes black cable for receiver.
	Rear Mounting Brackets	**F39-EJ-R ✻5**	Top/bottom 1 each, total of 2
	Side Mounting Brackets	**F39-EJ-S ✻5**	Top/bottom 1 each, total of 2
---	Series connection cable (for emitter)	**F39-JJR3WE-L**	Purchase additionally for series connection when using the Water-resistant Case.
	Series connection cable (for receiver)	**F39-JJR3WE-D**	

✻1. This product is for F3SJ-A only.
✻2. When using for both emitter and receiver, order two sets.
✻3. There are restrictions to the application conditions depending on the protective height of the Curtain. Refer to the *Water-resistant Case* on page 77.
✻4. The same four digits indicating protective height that are used in the Sensor model number (□□□□) are used in the part of the Protector model number.
✻5. Be sure to purchase brackets with the Case to match the mounting direction (rear or side).

Specifications (For details, refer to the instruction manual or User's manual.)

F3SJ-A□□□□P14/P20/P30/P55/N14/N20/N30/N55

Model	PNP Output	F3SJ-A□□□□P14	F3SJ-A□□□□P20	F3SJ-A□□□□P30	F3SJ-A□□□□P55
	NPN Output	F3SJ-A□□□□N14	F3SJ-A□□□□N20	F3SJ-A□□□□N30	F3SJ-A□□□□N55
Sensor type		Type 4 safety light curtain			
Version		Ver. 2			
Setting tool connection		Connectable			
Safety category		Safety purpose of category 4, 3, 2, 1, or B			
Detection capability		Opaque objects 14 mm in diameter	Opaque objects 20 mm in diameter	Opaque objects 30 mm in diameter	Opaque objects 55 mm in diameter
Beam gap (P)		9 mm	15 mm	25 mm	50 mm
Number of beams (n)		26 to 140	16 to 100	10 to 100	6 to 50
Protective height (PH)		245 to 1,271 mm	245 to 1,505 mm	245 to 2,495 mm	270 to 2,470 mm
Lens diameter		Diameter 5 mm			
Operating range ✻		0.2 to 9 m (protective height 1,640 mm max.), 0.2 to 7 m (protective height 1,655 mm min.) (Depending on the setting tool, the detection distance can be shortened to 0.5 m.)			
Response time (under stable light incident condition) (For details, see *"Response Time"* on page 76.)	ON to OFF	1 set, 0245 to 983: 11 ms to 17.5 ms max. 1,055 or higher: 20 ms to 25 ms max.	1 set, 0245 to 1205: 10 ms to 15 ms max. 1235 or higher: 17.5 ms to 22.5 ms max.	1 set: 10 ms to 17.5 ms max.	1 set: 10 ms to 13 ms max.
	OFF to ON	1 set, 0245 to 983: 44 ms to 70 ms max. 1,055 or higher: 80 ms to 100 ms max.	1 set, 0245 to 1205: 40 ms to 60 ms max. 1235 or higher: 70 ms to 90 ms max.	1 set: 40 ms to 70 ms max.	1 set: 40 ms to 52 ms max.
Startup waiting time		2 s max. (2.2 s max. for series connection)			
Power supply voltage (Vs)		24 VDC ±20% (ripple p-p10% max.)			
Current consumption (no load)	Emitter	To 50 beams: 76 mA max., 51 to 100 beams: 106 mA max., 101 to 150 beams: 130 mA max., 151 to 180 beams: 153 mA max., 201 to 234 beams: 165 mA max.			
	Receiver	To 50 beams: 68 mA max., 51 to 100 beams: 90 mA max., 101 to 150 beams: 111 mA max., 151 to 180 beams: 128 mA max., 201 to 234 beams: 142 mA max.			
Light source (emitted wavelength)		Infrared LED (870 nm)			
Effective aperture angle (EAA)		Based on IEC 61496-2.Within ±2.5° for both emitter and receiver when the detection distance is 3 m or over			
Safety outputs (OSSD)	PNP outputs	Two PNP transistor outputs, load current 300 mA max., residual voltage 2 V max. (except for voltage drop due to cable extension), allowable capacity load 2.2 µF, leak current 1 mA max. (This can be different from traditional logic (ON/OFF) because safety circuit is used.)			
	NPN Output	Two NPN transistor outputs, load current 300 mA max., residual voltage 2 V max. (except for voltage drop due to cable extension), allowable capacity load 2.2 µF, leak current 2mA max. (This can be different from traditional logic (ON/OFF) because safety circuit is used.)			
Auxiliary output 1 (Non-safety output)	PNP outputs	One PNP transistor output, load current 300 mA max., residual voltage 2 V max. (except for voltage drop due to cable extension), leak current 1 mA max.			
	NPN output	One NPN transistor output, load current 300 mA max., residual voltage 2 V max. (except for voltage drop due to cable extension), leak current 1 mA max.			
Auxiliary output 2 (Non-safety output. Function for Basic System.)	PNP outputs	One PNP transistor output, load current 50 mA max., residual voltage 2 V max. (except for voltage drop due to cable extension), leak current 1 mA max.			
	NPN output	One NPN transistor output, load current 50 mA max., residual voltage 2 V max. (except for voltage drop due to cable extension), leak current 1 mA max.			
External indicator output (Non-safety output)		Available indicators • Incandescent lamp: 24 VDC, 3 to 7 W • LED lamp: Load current 10 mA to 300 mA max., leak current 1 mA max. (To use an external indicator, an F39-JJ3N universal indicator cable or an F39-A01P-PAC dedicated external indicator kit is required.)			
Output operation mode	Receiver	Safety output 1, 2: ON when receiving light Auxiliary output 1: Inverse of safety output signals (Operation mode can be changed with the setting tool.) External indicator output 1: Inverse of safety output signals for a basic system (Operation mode can be changed with the setting tool.), ON when muting/override for a muting system (Operation mode can be changed with the setting tool.)			
	Emitter	Auxiliary output 2: Turns ON when the point of 30,000 operating hours is reached (Operation mode can be changed with the setting tool.) External indicator output 2: ON when lock-out for a basic system (Operation mode can be changed with the setting tool.) ON when muting/override for a muting system (Operation mode can be changed with the setting tool.)			

✻ Use of the Spatter Protection Cover causes a 10% maximum sensing distance attenuation.

Model	PNP output	F3SJ-A□□□□P14	F3SJ-A□□□□P20	F3SJ-A□□□□P30	F3SJ-A□□□□P55
	NPN output	F3SJ-A□□□□N14	F3SJ-A□□□□N20	F3SJ-A□□□□N30	F3SJ-A□□□□N55
Input voltage	PNP output	Test input, Interlock select input, Reset input, Muting input: ON voltage: 9 V to Vs (short circuit current: approx. 2.0 mA), OFF voltage: 0 to 1.5 V, or open External device monitoring input: ON voltage: 9 V to Vs (short circuit current: approx. 3.5 mA), OFF voltage:open **Note:** The Vs indicates a voltage value in your environment.			
	NPN output	Test input, Interlock select input, Reset input, Muting input: ON voltage: 0 to 1.5 V (short-circuit current: approx. 1.5 mA), OFF voltage: 9 V to Vs, or open External device monitoring input: ON voltage: 0 to 1.5 V (short-circuit current: approx. 4.0 mA), OFF voltage:open **Note:** The Vs indicates a voltage value in your environment.			
Indicator	Emitter	Light intensity level indicators (green LED x 2, orange LED x 3): ON based on the light intensity Error mode indicators (red LED x 3): Blink to indicate error details Power indicator (green LED x 1): ON while power is on Interlock indicator (yellow LED x 1): ON while under interlock, blinks at lockout. External device monitoring indicator (muting input 1 indicator), Blanking/test indicator (muting input 2 indicator) (green LED x 2): ON/flash according to function			
	Receiver	Light intensity level indicators (green LED x 2, orange LED x 3): ON based on the light intensity Error mode indicators (red LED x 3): Blink to indicate error details OFF output indicator (red LED x 1): ON when safety output is OFF, blinks at lockout. ON output indicator (green LED x 1): ON while safety output is ON Muting error indicator, Blanking /test indicator (green LED x 2): ON/flash according to function			
Mutual interference prevention function		Interference light prevention algorithm, sensing distance change function			
Series connection		Time division emission by series connection • Number of connections: up to 4 sets (F3SJ-A only) F3SJ-E, F3SJ-B and F3SJ-TS cannot be connected. • Total number of beams: up to 400 beams • Cable length between sensors: 15 m max. (not including series connection cable (F39-JJR3W or F39-JJR□L) and power cable) • Response time under connection: Refer to page 76			
Test function		• Self test (at power-ON and at power distribution) • External test (emission stop function by test input)			
Safety-related functions		• Start interlock, restart interlock (Must be set with a setting tool when the muting function is used.) • External device monitor • Muting (Lamp burnout detection, override function included. F39-CN6 key cap for muting is required.) • Fixed blanking (must be set by a setting tool) • Floating blanking (must be set by a setting tool)			
Connection method		Connector method (M12, 8-pin)			
Protection circuit		Output short-circuit protection, and power supply reverse polarity protection			
Ambient temperature		Operating: -10 to 55°C (no icing), Storage: -30 to 70°C			
Ambient humidity		Operating: 35% to 85% (no condensation), Storage: 35% to 95%			
Operating ambient light intensity		Incandescent lamp: receiving-surface light intensity of 3,000 lx max., Sunlight: receiving-surface light intensity of 10,000 lx max.			
Insulation resistance		20 MΩ min. (at 500 VDC)			
Withstand voltage		1,000 VAC 50/60 Hz, 1 min			
Degree of protection		IP65 (IEC 60529)			
Vibration resistance		Malfunction: 10 to 55 Hz, Multiple amplitude of 0.7 mm, 20 sweeps in X, Y, and Z directions			
Shock resistance		Malfunction: 100 m/s^2, 1,000 times each in X, Y, and Z directions			
Material		Casing (including metal parts on both ends): Aluminum, zinc die-cast Cap: ABS resin, Optical cover: PMMA resin (acrylic), Cable: Oil resistant PVC			
Net Weight ✻1		Calculate using the following expressions: (1) For F3SJ-A□□□□□14, weight (g) = (protective height) x 1.67 + 215 (2) For F3SJ-A□□□□□20, weight (g) = (protective height) x 1.5 + 217 (3) For F3SJ-A□□□□□30, weight (g) = (protective height) x 1.41 + 220 (4) For F3SJ-A□□□□□55, weight (g) = (protective height) x 1.3 + 220			
Gross Weight ✻1		Calculate using the following expressions: (1) For F3SJ-A□□□□□14, weight (g) = (protective height) x 1.7 + α (2) For F3SJ-A□□□□□20/F3SJ-A□□□□□30, weight (g) = (protective height) x 1.5 + α (3) For F3SJ-A□□□□□55, weight (g) = (protective height) x 1.4 + α The values for α are as follows: Protected height 245 to 596 mm: = 1,100 protected height 1,660 to 2,180 mm: = 2,400 Protected height 600 to 1,130 mm: = 1,500 protected height 2,195 to 2,500 mm: = 2,600 Protected height 1,136 to 1,658 mm: = 2,000			

✻1. The net weight is the weight of an emitter and a receiver.
✻2. The gross weight is the weight of an emitter, a receiver, included accessories and a package.

Model	PNP output	F3SJ-A□□□□P14	F3SJ-A□□□□P20	F3SJ-A□□□□P30	F3SJ-A□□□□P55
	NPN output	F3SJ-A□□□□N14	F3SJ-A□□□□N20	F3SJ-A□□□□N30	F3SJ-A□□□□N55
Accessories	Instruction manual, standard mounting bracket (F39-LJ1 bracket for top/bottom mounting), mounting brackets (intermediate) (✻), error mode label, Quick Installation Manual (QIM) ✻. Number of intermediate brackets depends on protective height of F3SJ. • For protective height from 600 to 1,130 mm : 1 set for each of the emitter and receiver is included • For protective height from 1,136 to 1,658 mm : 2 sets for each of the emitter and receiver are included • For protective height from 1,660 to 2,180 mm : 3 sets for each of the emitter and receiver are included • For protective height from 2,195 to 2,500 mm : 4 sets for each of the emitter and receiver are included				
Applicable standards	IEC 61496-1, EN 61496-1, UL 61496-1, Type 4 ESPE (Electro-Sensitive Protective Equipment) IEC 61496-2, EN 61496-2, UL 61496-2, Type 4 AOPD (Active Opto-electronic Protective Devices) IEC 61508-1 to -3, EN 61508-1 to -3 SIL3 ISO 13849-1: 2015, EN ISO 13849-1: 2015 (PLe/Safety Category 4) UL 508, UL 1998, CAN/CSA C22.2 No.14, CAN/CSA C22.2 No.0.8				

Response Time

Model	Protected Height (mm)	Number of Beams	Response time ms (ON to OFF)	Response time ms (OFF to ON)
F3SJ-A□14 Series	245 to 263	26 to 28	11	44
	281 to 389	30 to 42	12	48
	407 to 497	44 to 54	13	52
	515 to 605	56 to 66	14	56
	623 to 731	68 to 80	15	60
	767 to 983	84 to 108	17.5	70
	1,055 to 1,271	116 to 140	20	80
F3SJ-A□20 Series	245	16	10	40
	275 to 425	18 to 28	11	44
	455 to 635	30 to 42	12	48
	665 to 815	44 to 54	13	52
	845 to 995	56 to 66	14	56
	1,025 to 1,205	68 to 80	15	60
	1,235 to 1,505	82 to 100	17.5	70
F3SJ-A□30 Series	245 to 395	10 to 16	10	40
	420 to 720	17 to 29	11	44
	745 to 1,045	30 to 42	12	48
	1,070 to 1,295	43 to 52	13	52
	1,395 to 1,620	56 to 65	14	56
	1,745 to 1,995	70 to 80	15	60
	2,120 to 2,495	85 to 100	17.5	70
F3SJ-A□55 Series	270 to 770	6 to 16	10	40
	820 to 1,420	17 to 29	11	44
	1,470 to 2,070	30 to 42	12	48
	2,120 to 2,470	43 to 50	13	52

Note: Use the following expressions for series connection.
For 2-set series connection:
Response time (ON to OFF): Response time of the 1st unit + Response time of the 2nd unit - 1 (ms), Response time (OFF to ON): Response time calculated by the above x 4 (ms)
For 3-set series connection:
Response time (ON to OFF):
Response time of the 1st unit + Response time of the 2nd unit + Response time of 3rd unit - 5 (ms), Response time (OFF to ON): Response time calculated by the above x 5 (ms)
(For models with the "-TS" suffix, multiply the response time obtained by the above x 5 (ms), or use 200 ms, whichever is less.)
For 4-set series connection:
Response time (ON to OFF): Response time of the 1st unit + Response time of the 2nd unit + Response time of the 3rd unit + Response time of the 4th unit - 8 (ms)
Response time (OFF to ON): Response time calculated by the above x 5 (ms)

Cable Extension Length

Total cable extension length must be no greater than the lengths described below.

When the F3SJ and an external power supply are directly connected, or when the F3SJ is connected to a G9SA-300-SC.

Condition	1 set	2 sets	3 sets	4 sets
Using incandescent lamp for auxiliary output and external indicator output	45 m	40 m	30 m	20 m
Not using incandescent lamp ✻	100 m	60 m	45 m	30 m

When connected to the F3SP-B1P

Condition	1 set	2 sets	3 sets	4 sets
Using incandescent lamp for external indicator output 2	40 m	30 m	25 m	20 m
Using incandescent lamp for external indicator output 1 Using incandescent lamp for auxiliary output 1	60 m	45 m	30 m	20 m
Not using incandescent lamp ✻	100 m	60 m	45 m	30 m

Note: Keep the cable length within the rated length. Failure to do so is dangerous as it may prevent safety functions from operating normally.
✻ The F39-A01P□-PAC Dedicated External Indicator Set uses LEDs. Refer to the cable extension lengths for "Not using incandescent lamp".

Accessories

Control Unit

Item / Model		F3SP-B1P
Applicable sensor		F3SJ-B/A (Only for PNP output type) ✻
Power supply voltage		24 VDC±10%
Power consumption		DC1.7 W max. (not including sensor's current consumption)
Operation time		100 ms max. (not including sensor's response time)
Response time		10 ms max. (not including sensor's response time)
Relay output	Number of contacts	3NO+1NC
	Rated load	25 VAC 5 A (cos φ = 1), 30 VDC 5 A L/R = 0 ms
	Rated current	5 A
Connection type	Between sensors	M12 connector (8-pin)
	Others	Terminal block
Weight (packed state)		Approx. 280 g
Accessories		Instruction manual

✻NPN output type cannot be connected. Also, the system cannot be used as a muting system.

Laser Pointer

Item / Model	F39-PTJ
Applicable sensor	F3SJ Series
Power supply voltage	4.65 or 4.5 VDC
Battery	Three button batteries (SR44 or LR44)
Battery life ✻	SR44: 10 hours of continuous operation, LR44: 6 hours of continuous operation
Light source	Red semiconductor laser (wavelength: 650 nm, 1 mW max. JIS class 2, EN/IEC class 2, FDA class II)
Spot diameter (typical value)	6.5 mm at 10 m
Ambient temperature	Operating: 0 to 40°C Storage: -15 to 60°C (with no icing or condensation)
Ambient humidity	Operating and storage: 35% to 85% (with no condensation)
Material	Laser module case: aluminum Mounting bracket: aluminum and stainless
Weight	Approx. 220 g (packed)
Accessories	Laser safety standard labels (EN: 1, FDA: 3) Button batteries (SR44: 3), instruction manual

✻ Battery life varies depending on a battery used.

Dedicated External Indicator Set

Item / Model	F39-A01PR-PAC	F39-A01PG-PAC	F39-A01PY-PAC
Applicable sensor	F3SJ-A (Common for PNP/NPN output type. Can be attached to emitters and/or receivers)		
Light source	Red LED	Green LED	Yellow LED
Power supply voltage	24 VDC±10% (supplied by sensor)		
Consumption current	50 mA max. (supplied by sensor)		
Connection type	Dedicated accessory connector cable (Sensor side: Dedicated 10-pin connector, Indicator side: M12 8-pin connector)		
Set details	Indicator (red), Dedicated connector cable (0.1 m), Dedicated mounting bracket (1 for each)	Indicator (green), Dedicated connector cable (0.1 m), Dedicated mounting bracket (1 for each)	Indicator (yellow), Dedicated connector cable (0.1 m), Dedicated mounting bracket (1 for each)

Water-resistant Case

Item / Model	F39-EJ□□□□-L, F39-EJ□□□□-D	
Applicable sensor	F3SJ-A Series Curtains with a protective height of 600 mm or shorter.	F3SJ-A Series Curtains with a protective height of 605 mm or longer.
Ambient temperature	-10 to 55°C (operation and storage)	13 to 33°C (operation and storage)
Mounting direction	No restrictions	Vertical direction only (see following diagram)
Operating range	0.2 to 7 m (for a protective height of 1,631 mm max.), 0.2 to 5 m (for a protective height of 1,655 mm min.)	
Degree of protection	IP67 (IEC 60529) (When assembled according to the application precautions)	
Material	Case: Acrylic resin, Rubber: Nitrile rubber, M5 bolt: SUSXM7, M4 bolt: SUS316L, Cable: Oil-resistant PVC, Plate: SUS304, Mounting Bracket (optional): SUS304	
Weight (packed state)	Calculation formula: Weight (g) = 1.5 x □□□□ + 300 (□□□□ stands for the four digits of the model number (protective height)) (The optional Mounting Brackets come in a set of two, and weigh 120 g. This weight is not included in the above formula.)	

Note: 1. Vibration
When using Curtains with a protective height of 605 mm or more, the vibration performance of the applicable sensor is reduced.
Do not use these Curtains in locations that are subject to vibration.

2. Operating range
When using these cases, the operating range of the applicable sensor is reduced.
Check the specifications prior to use.

3. Mounting direction
When using Curtains with a protective height of 605 mm or more, some slackness occurs due to the weight of the Curtain.
For this reason, mount these Curtains only in the vertical direction.

Mounting direction (the cable end and terminating end can be positioned in either direction)

Horizontal direction

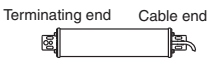

Vertical direction

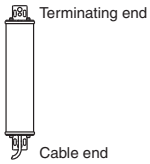

Connections

Basic Wiring Diagram

[PNP Output]

Wiring when using manual reset mode, external device monitoring

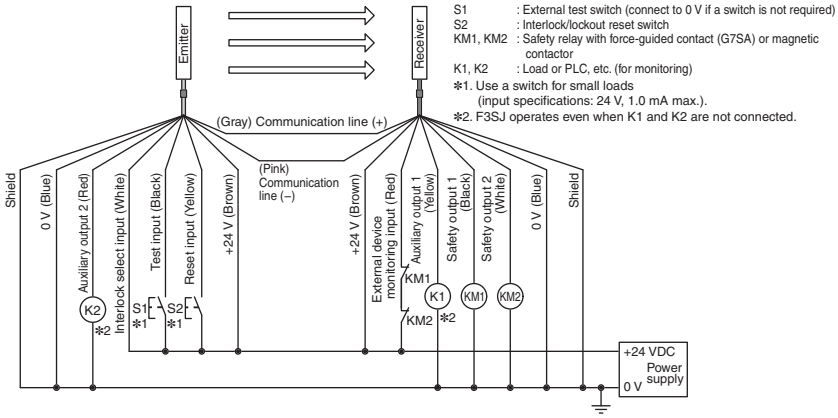

Wiring when the external device monitoring function will not be used

- Use a setting tool to set the external device monitoring function to "Disabled."
- When using an auxiliary output 1 that has not been changed (output operation mode is "control output data," and inverse of safety output signals is "Enabled), the external device monitoring function will be disabled when auxiliary output 1 and the external device monitoring input are connected as shown below.

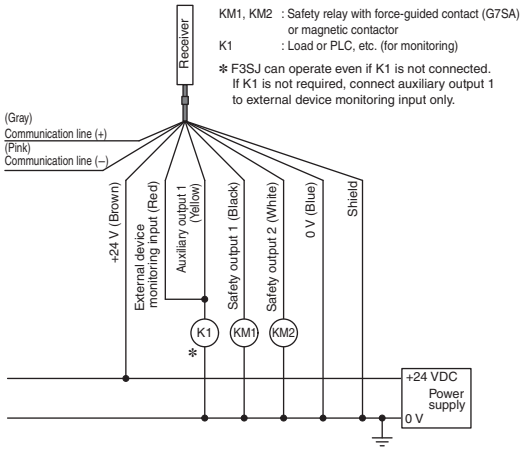

Wiring for auto reset mode

- The auto reset mode will be enabled when the emitter is wired as shown below.

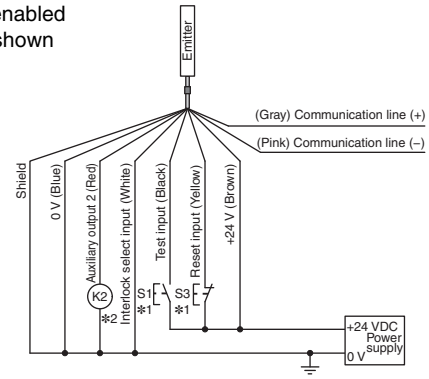

S1 : External test switch
(connect to 0 V if a switch is not required)
S3 : Lockout reset switch
(connect to 24 V if a switch is not required)
K2 : Load or PLC, etc. (for monitoring)

*1. Use a switch for small loads
(Input specifications: 24 V, 1.0 mA max.).
*2. F3SJ operates even when K2 is not connected.

[NPN Output]

Wiring when using manual reset mode, external device monitoring

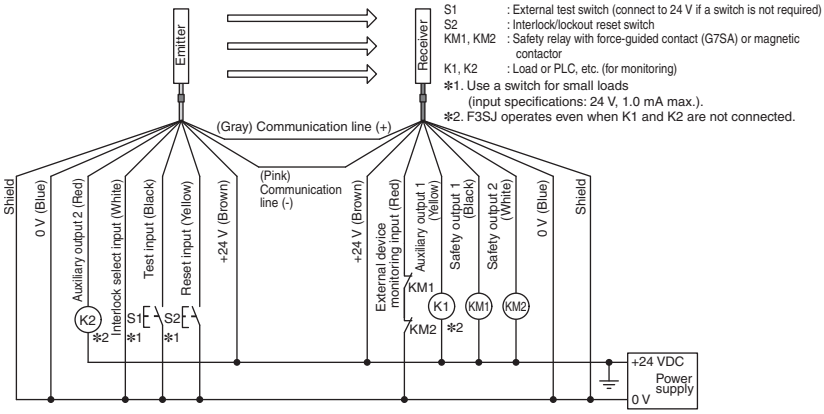

Wiring when the external device monitoring function will not be used

- Use a setting tool to set the external device monitoring function to "Disabled."
- When using an auxiliary output 1 that has not been changed (output operation mode is "safety output data," and inverse of control output signals is "Enabled), the external device monitoring function will be disabled when auxiliary output 1 and the external device monitoring input are connected as shown below.

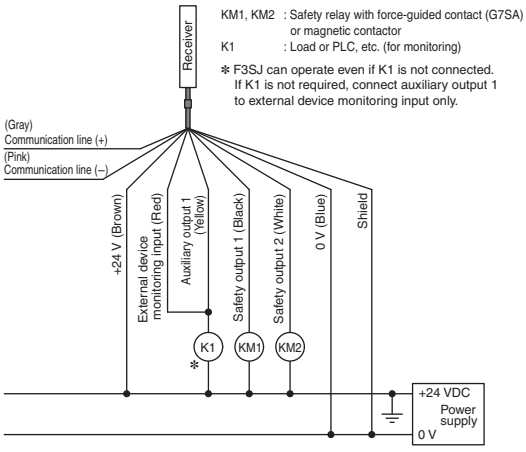

Wiring for auto reset mode

- The auto reset mode will be enabled when the emitter is wired as shown below.

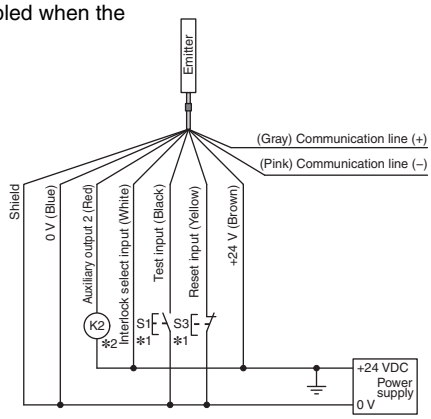

S1 : External test switch
(connect to 24 V if a switch is not required)
S3 : Lockout reset switch
(connect to 0 V if a switch is not required)
K2 : Load or PLC, etc. (for monitoring)

*1. Use a switch for small loads
(Input specifications: 24 V, 1.0 mA max.).
*2. F3SJ operates even when K2 is not connected.

Basic Wiring Diagram for Muting System

[PNP Output]

Wiring when using muting and external device monitoring functions

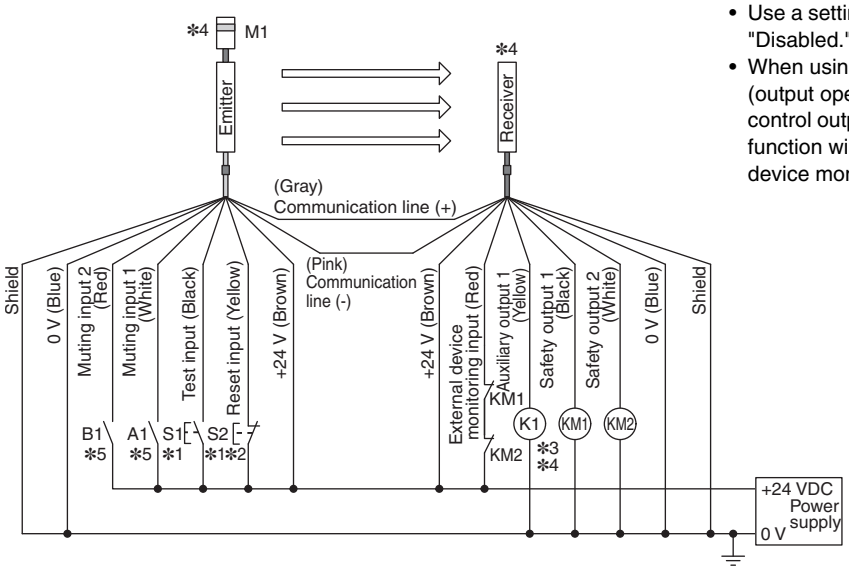

When external device monitoring function is not required

- Use a setting tool to set the external device monitoring function to "Disabled."
- When using an auxiliary output 1 that has not been changed (output operation mode is "safety output data," and inverse of control output signals is "Enabled), the external device monitoring function will be disabled when auxiliary output 1 and the external device monitoring input are connected.

S1 : External test switch (connect to 0 V if a switch is not required)
S2 : Lockout reset switch (connect to 24 V if a switch is not required)
A1 : Contact by muting sensor A1
B1 : Contact by muting sensor B1
KM1, KM2 : Safety relay with force-guided contact (G7SA) or magnetic contactor
K1 : Load or PLC, etc. (for monitoring)
M1 : Muting lamp

*1. Use a switch for small loads (input specifications: 24 V, 1.0 mA max.).
*2. When using the interlock function, this also functions as an interlock reset switch. (Must be set with a setting tool.)
*3. F3SJ operates even when K1 is not connected.
*4. Connect the muting lamp to either the external indicator output or auxiliary output 1 for the emitter or the receiver. When connecting the muting lamp to auxiliary output 1, the parameter must be changed with a setting tool.
*5. Two-wire type muting sensor cannot be used.

[NPN Output]

Wiring when using muting and external device monitoring functions

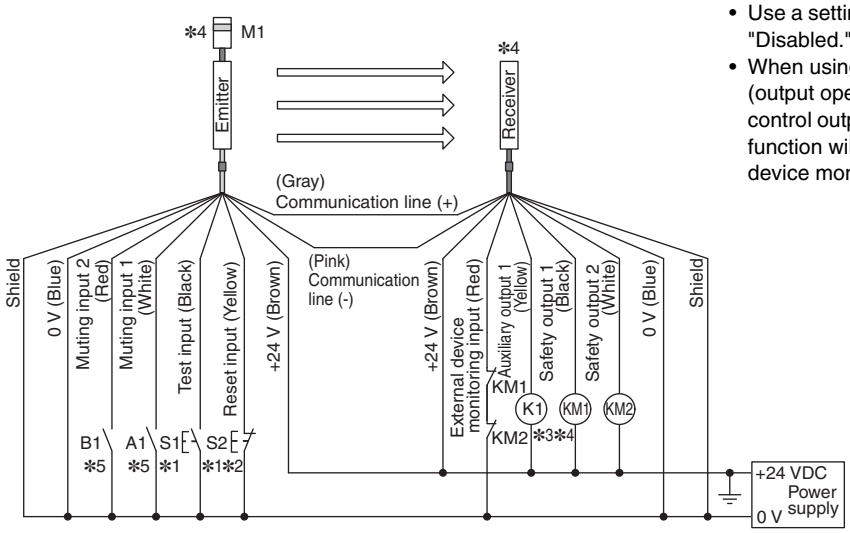

When external device monitoring function is not required

- Use a setting tool to set the external device monitoring function to "Disabled."
- When using an auxiliary output 1 that has not been changed (output operation mode is "safety output data," and inverse of control output signals is "Enabled), the external device monitoring function will be disabled when auxiliary output 1 and the external device monitoring input are connected.

S1 : External test switch (connect to 24 V if a switch is not required)
S2 : Lockout reset switch (connect to 0 V if a switch is not required)
A1 : Contact by muting sensor A1
B1 : Contact by muting sensor B1
KM1, KM2 : Safety relay with force-guided contact (G7SA) or magnetic contactor
K1 : Load or PLC, etc. (for monitoring)
M1 : Muting lamp

*1. Use a switch for small loads (input specifications: 24 V, 1.0 mA max.).
*2. When using the interlock function, this also functions as an interlock reset switch. (Must be set with a setting tool.)
*3. F3SJ operates even when K1 is not connected.
*4. Connect the muting lamp to either the external indicator output or auxiliary output 1 for the emitter or the receiver. When connecting the muting lamp to auxiliary output 1, the parameter must be changed with a setting tool.
*5. Two-wire type muting sensor cannot be used.

Wiring Diagram When Using Simple Wiring System

F39-CN5 simple wiring connector

Internal wiring of F39-CN5 simple wiring connector

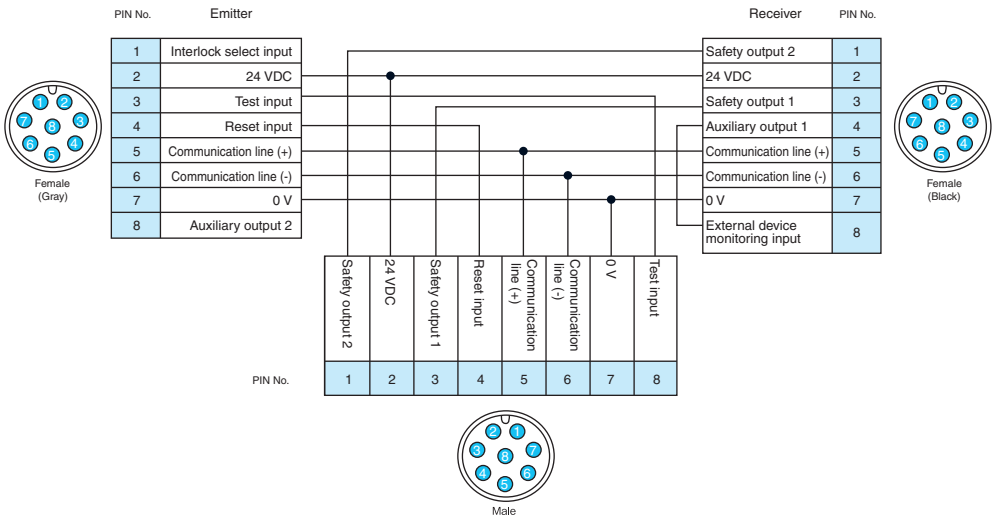

[PNP Output]

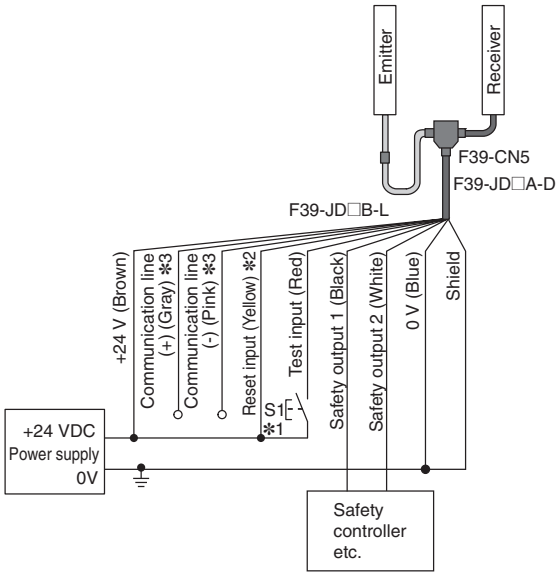

S1 : External test switch (connect 0 V if a switch is not required)

✻1. Use a switch for small loads (input specifications: 24 V, 1.0 mA max.).

✻2. When the lockout reset function is used, connect to 24 V via a lockout reset switch (N.C. contact).

✻3. Make sure the Communication lines are insulated. If the lines are shorted, the F3SJ-A enters the lockout state.

Controllers connectable with PNP output F3SJ series

Safety controller	Model
Safety Network Controller	NE1A series
Safety Controller	G9SP series
Flexible Safety Unit	G9SX series
Safety Relay Unit	G9SA series

[NPN Output]

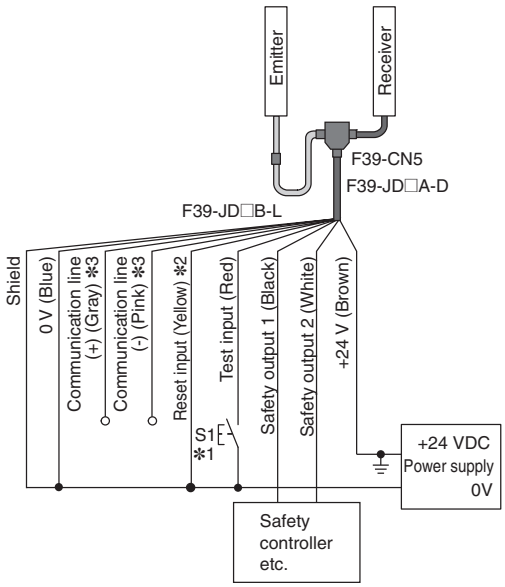

S1 : External test switch (connect 24 V if a switch is not required)

✻1. Use a switch for small loads (input specifications: 24 V, 1.0 mA max.).

✻2. When the lockout reset function is used, connect to 0 V via a lockout reset switch (N.C. contact).

✻3. Make sure the Communication lines are insulated. If the lines are shorted, the F3SJ-A enters the lockout state.

Controller connectable with NPN output F3SJ series

Safety controller	Model
Safety Relay Unit	G9SA-301-P

Note: When using the Simple Wiring Connector (F39-CN5), the following functions are not available.
- Manual Reset
- External Device Monitoring
- Auxiliary Outputs 1, 2
- Muting/Override

When using the setting tools, make sure to keep the settings in the factory default.

Input/Output Circuit Diagram

Entire Circuit Diagram

[PNP Output]

The numbers in circles indicate the connectors' pin numbers.
The black circles indicate connectors for series connection.
The words in brackets ([ ]) indicate the signal name for muting system.

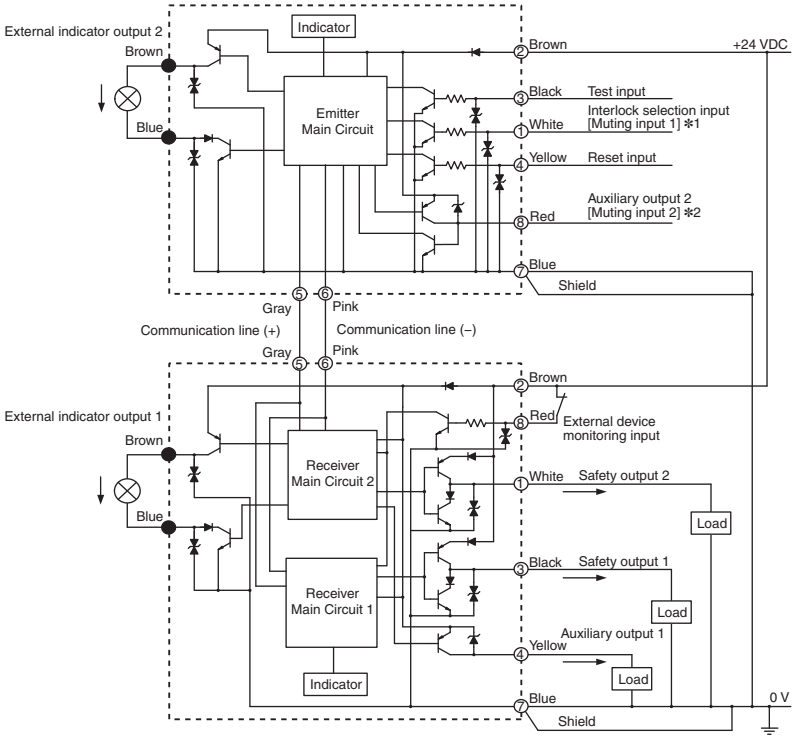

✻1. Open or muting input 1 for models with the "-TS" suffix.
✻2. Open or muting input 2 for models with the "-TS" suffix.

[NPN Output]

The numbers in circles indicate the connectors' pin numbers.
The black circles indicate connectors for series connection.
The words in brackets ([ ]) indicate the signal name for muting system.

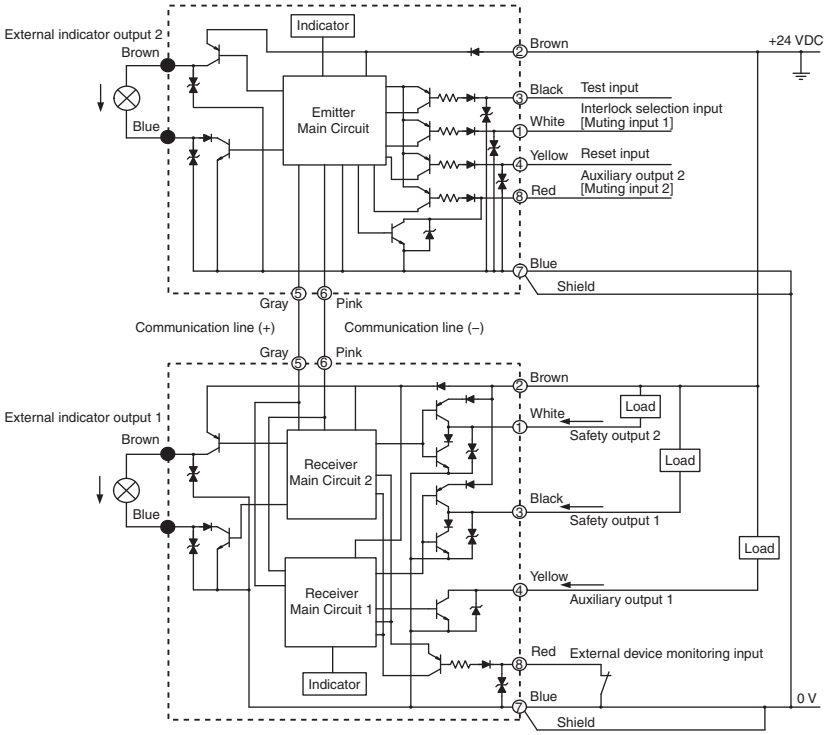

Connection Circuit Examples

Wiring for single F3SJ-A application [PNP Output]

Highest achievable PL/ safety category	Model	Stop category	Reset
PLe/4 equivalent	Safety Light Curtain F3SJ-A□□□□P□□ Safety Relay G7SA	0	Manual

Note: The above PL is only the evaluation result of the example. The PL must be evaluated in an actual application by the customer after confirming the usage conditions.

● Application Overview

- The power supply to the motor M is turned OFF when the beam is blocked.
- The power supply to the motor M is kept OFF until the beams are unblocked and the reset switch S2 is pressed.

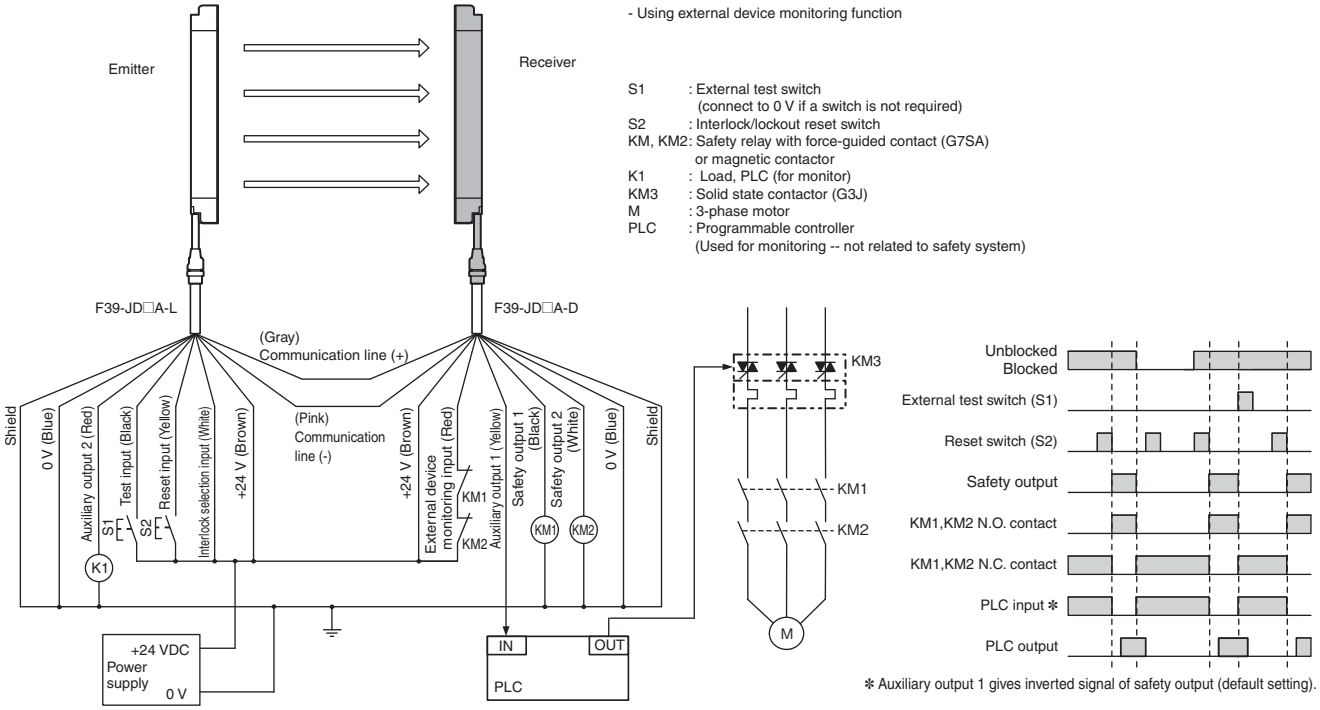

Wiring for connection with a controller F3SP-B1P [PNP Output]

Highest achievable PL/ safety category	Model	Stop category	Reset
PLe/4 equivalent	Safety Light Curtain F3SJ-A□□□□P□□ Control Unit F3SP-B1P Safety Relay G7SA	0	Manual

Note: The above PL is only the evaluation result of the example. The PL must be evaluated in an actual application by the customer after confirming the usage conditions.

● Application Overview

- The power supply to the motor M is turned OFF when the beam is blocked.
- The power supply to the motor M is kept OFF until the beams are unblocked and the reset switch S2 is pressed.

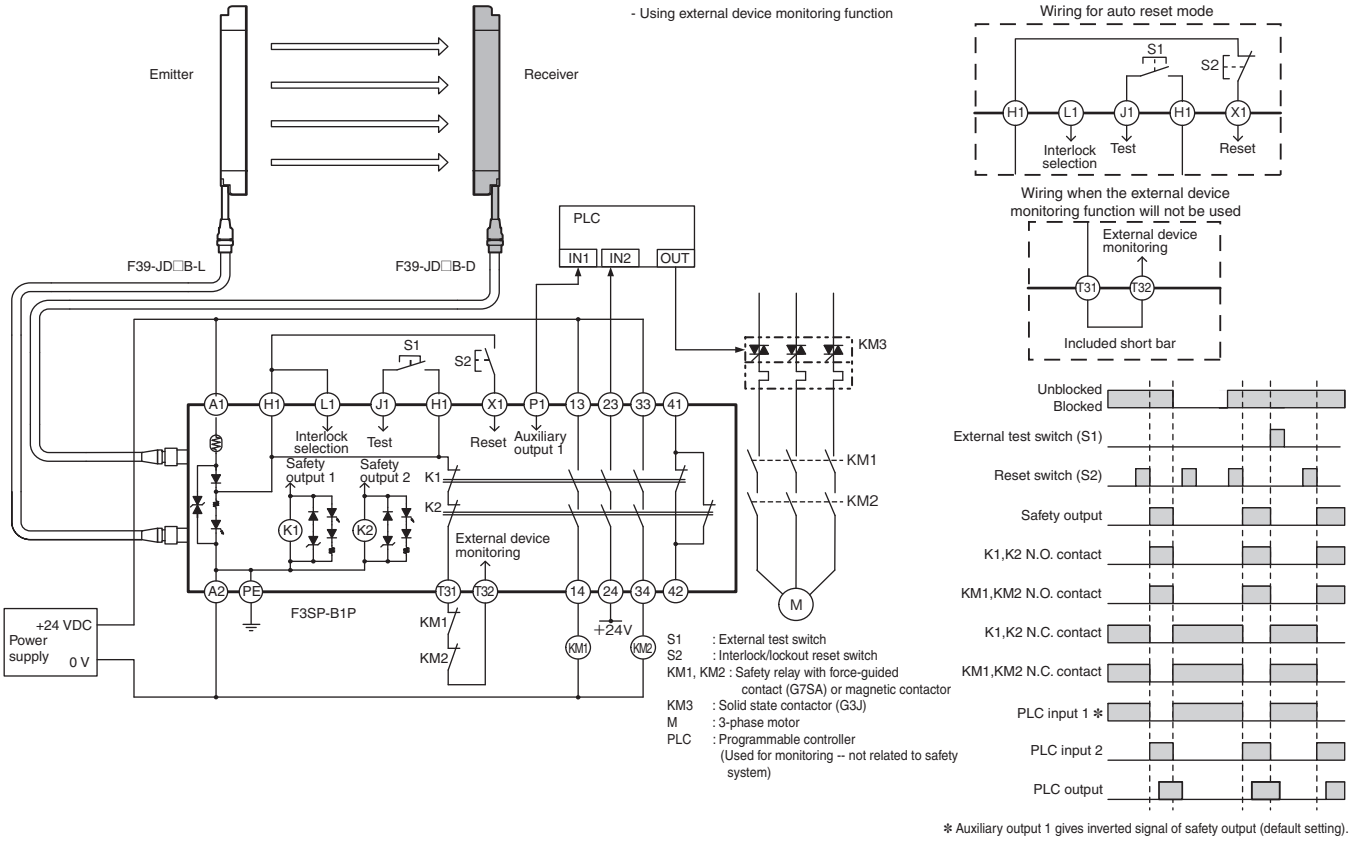

Note: It cannot be used as a muting system when F3SP-B1P is used.

Wiring for connection with a controller G9SX-AD322-T15 [PNP Output]

Highest achievable PL/ safety category	Model	Stop category	Reset
PLe/4 equivalent	Safety Light Curtain F3SJ-A□□□□P□□ Flexible Safety Unit G9SX-AD322-T15 Safety Relay G7SA	M1: 0 M2: 1	Auto

Note: The above PL is only the evaluation result of the example. The PL must be evaluated in an actual application by the customer after confirming the usage conditions.

● **Application Overview**

- The power supply to the motor M1 is turned OFF immediately when the beam is blocked, and stop command is sent to the motor controller for the motor M2.
- The power supply to the motor M2 is turned OFF after OFF-delay time.
- The power supply to the motor M1 and M2 is kept OFF until the beams are unblocked.

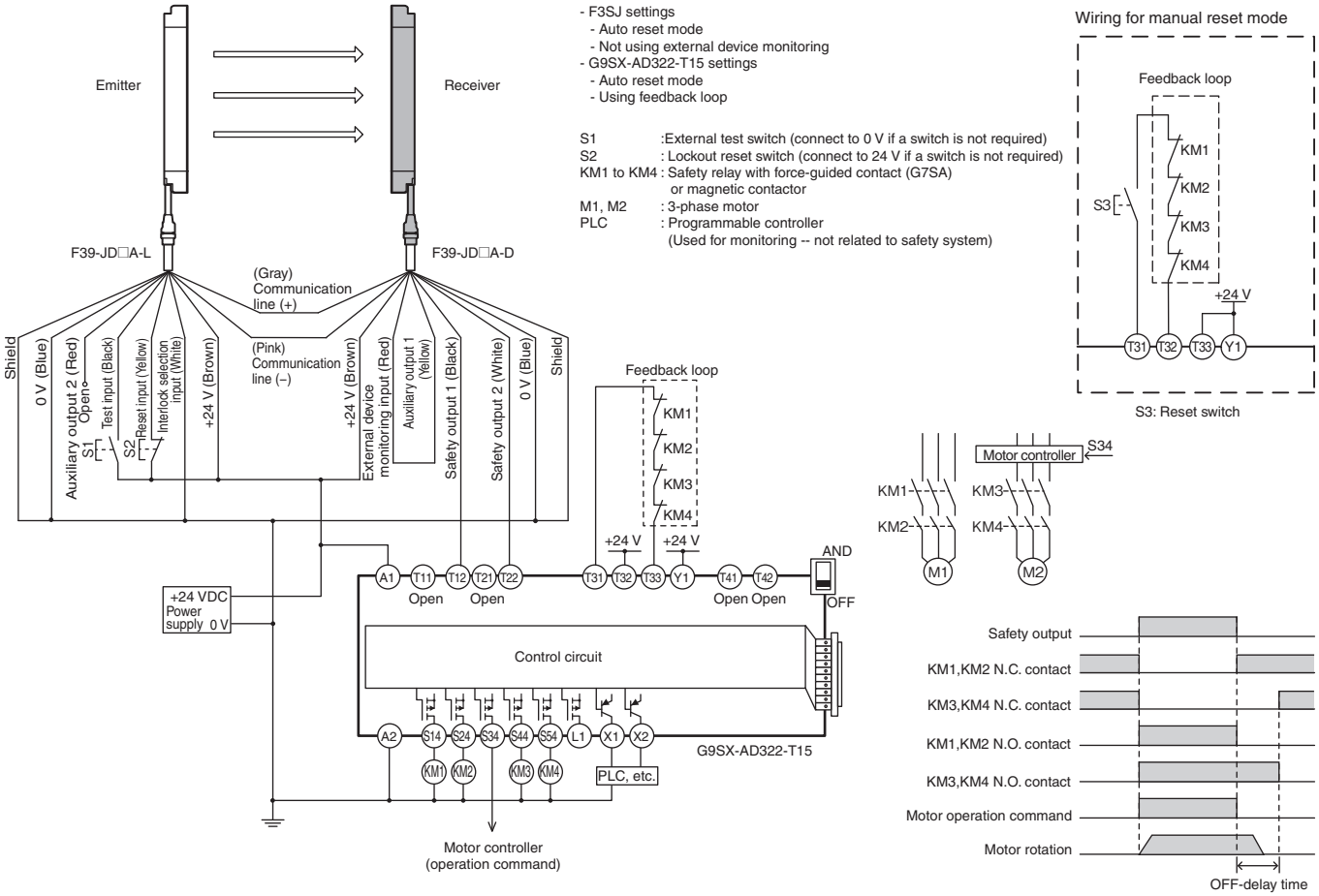

Wiring for single F3SJ-A application [NPN Output]

Highest achievable PL/ safety category	Model	Stop category	Reset
PLe/4 equivalent	Safety Light Curtain F3SJ-A□□□□N□□ Safety Relay G7SA	0	Manual

Note: The above PL is only the evaluation result of the example. The PL must be evaluated in an actual application by the customer after confirming the usage conditions.

● Application Overview

- The power supply to the motor M is turned OFF when the beam is blocked.
- The power supply to the motor M is kept OFF until the beams are unblocked and the reset switch S2 is pressed.

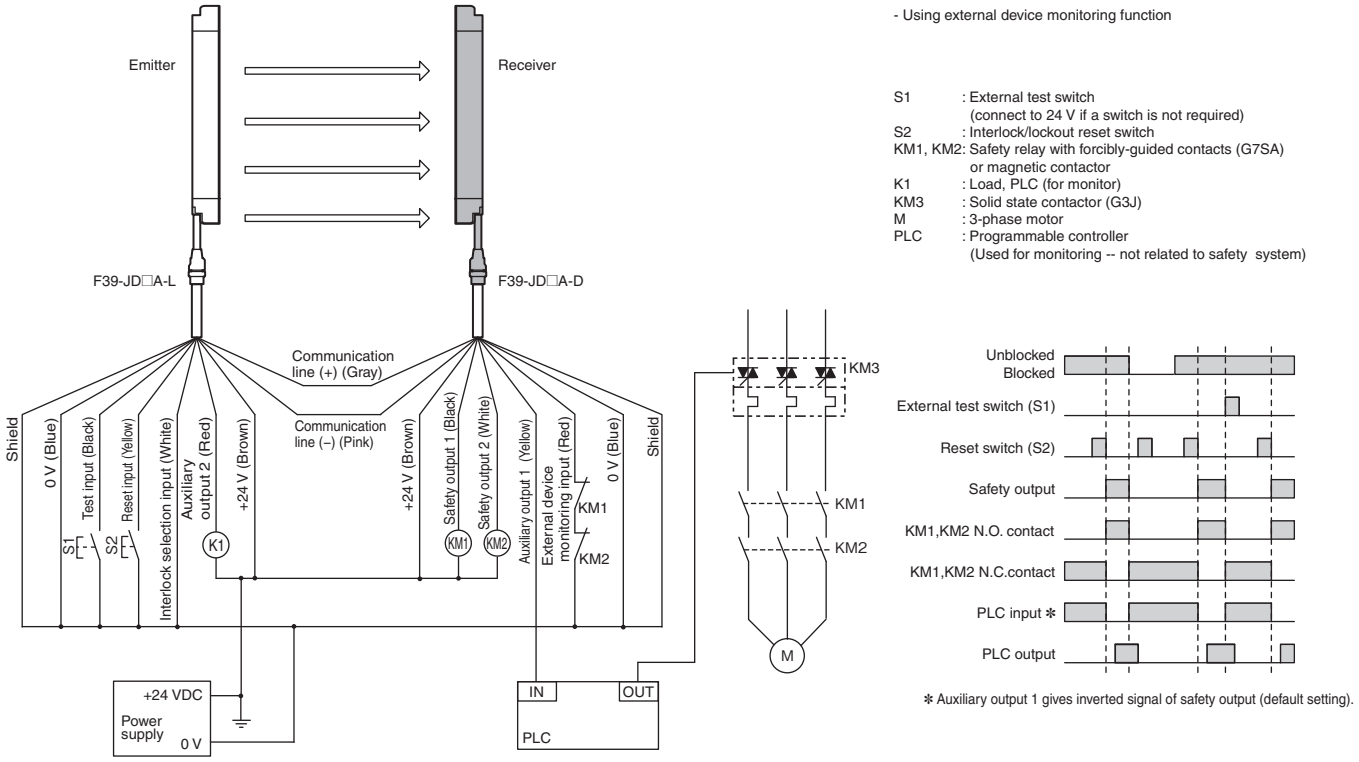

Wiring for connection with a controller G9SA-301-P [NPN Output]

Highest achievable PL/ safety category	Model	Stop category	Reset
PLe/4 equivalent	Safety Light Curtain F3SJ-A□□□□N□□ Safety Relay Unit G9SA-301-P 24V DC Safety Relay G7SA Emergency Stop Switch A165E/A22E	0	Manual

Note: The above PL is only the evaluation result of the example. The PL must be evaluated in an actual application by the customer after confirming the usage conditions.

● Application Overview

- The power supply to the motor M is turned OFF when the beam is blocked.
- The power supply to the motor M is turned OFF when the emergency stop switch is pressed.
- The power supply to the motor M is kept OFF until the beams are unblocked and the reset switch S2 is pressed while the emergency stop switch is released.

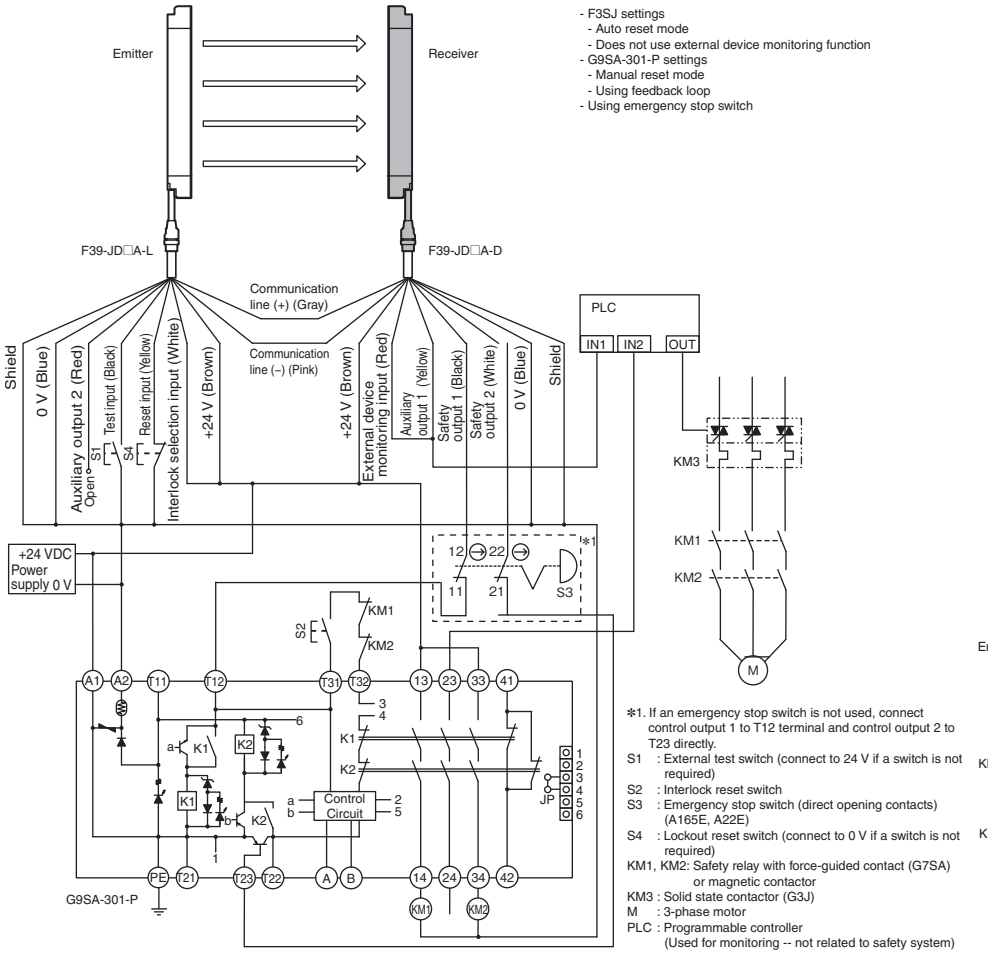

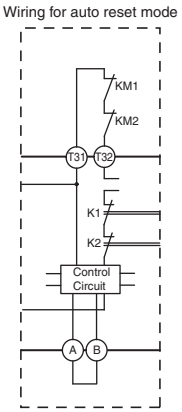

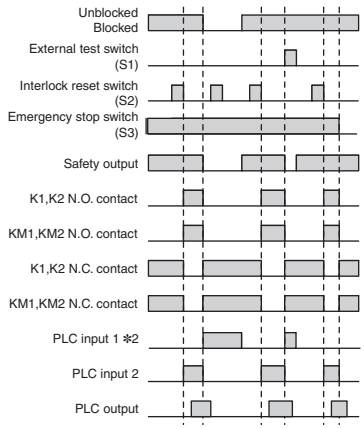

✻1. If an emergency stop switch is not used, connect control output 1 to T12 terminal and control output 2 to T23 directly.
S1 : External test switch (connect to 24 V if a switch is not required)
S2 : Interlock reset switch
S3 : Emergency stop switch (direct opening contacts) (A165E, A22E)
S4 : Lockout reset switch (connect to 0 V if a switch is not required)
KM1, KM2: Safety relay with force-guided contact (G7SA) or magnetic contactor
KM3 : Solid state contactor (G3J)
M : 3-phase motor
PLC : Programmable controller (Used for monitoring -- not related to safety system)

✻2 Auxiliary output 1 gives inverted signal of safety output (default setting).

Dimensions

(Unit: mm)

Main Units

When Using Standard Mounting Brackets

Backside mounting

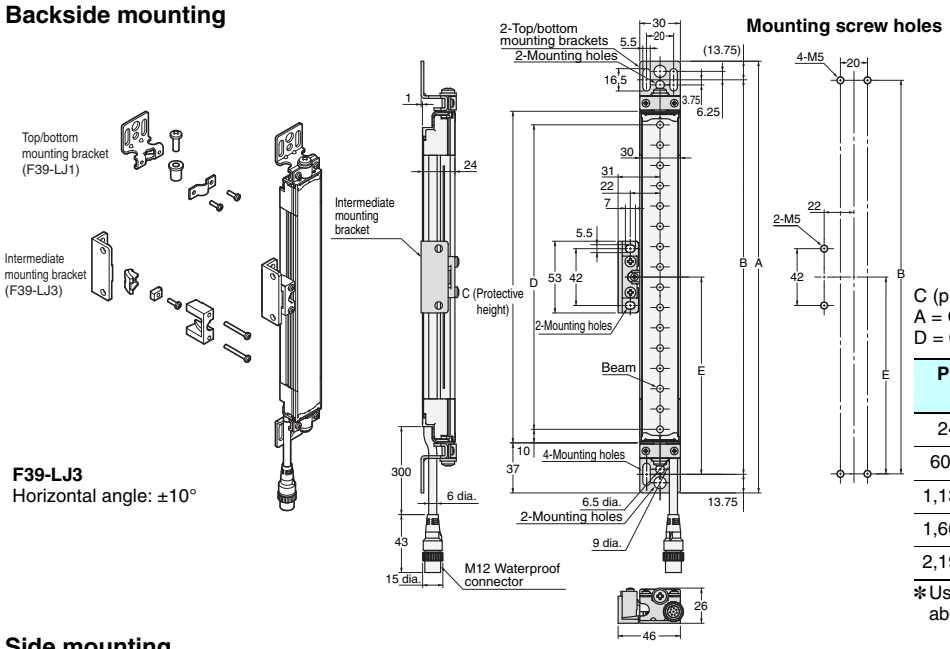

C (protective height): 4-digit number in the table
A = C + 74, B = C + 46.5
D = C - 20, E = See table below.

Protective height	Number of intermediate brackets	E ✻
245 to 596	0	---
600 to 1,130	1	E = B/2
1,136 to 1,658	2	E = B/3
1,660 to 2,180	3	E = B/4
2,195 to 2,500	4	E = B/5

✻Use E = 530 or less when none of the E values shown above are used.

Side mounting

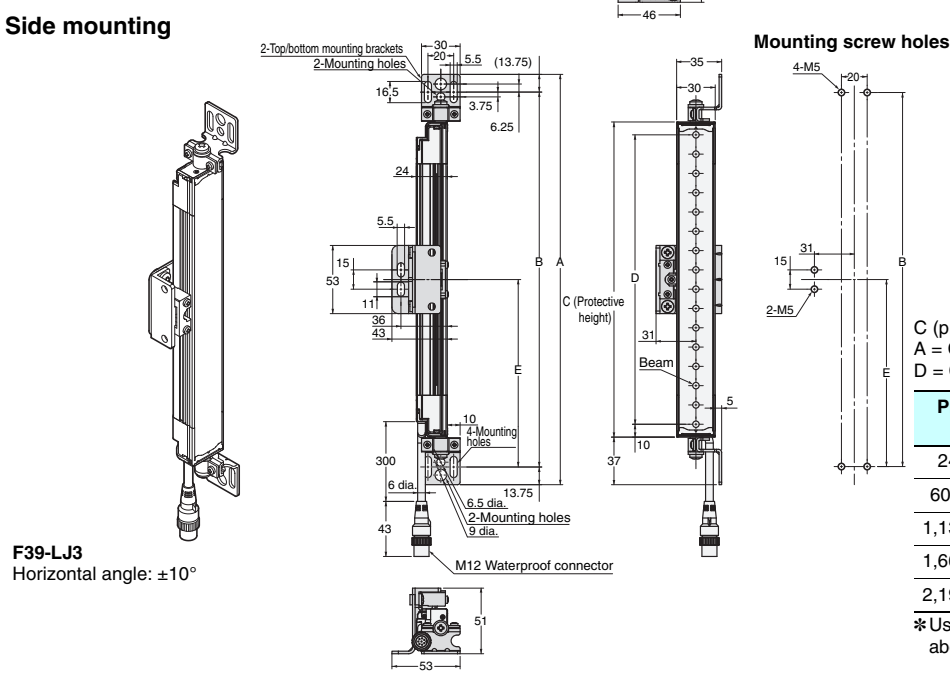

C (protective height): 4-digit number in the table
A = C + 74, B = C + 46.5
D = C - 20, E = See table below.

Protective height	Number of intermediate brackets	E ✻
245 to 596	0	---
600 to 1,130	1	E = B/2
1,136 to 1,658	2	E = B/3
1,660 to 2,180	3	E = B/4
2,195 to 2,500	4	E = B/5

✻Use E = 530 or less when none of the E values shown above are used.

F39-LJ1 Detailed Dimensions of Bracket

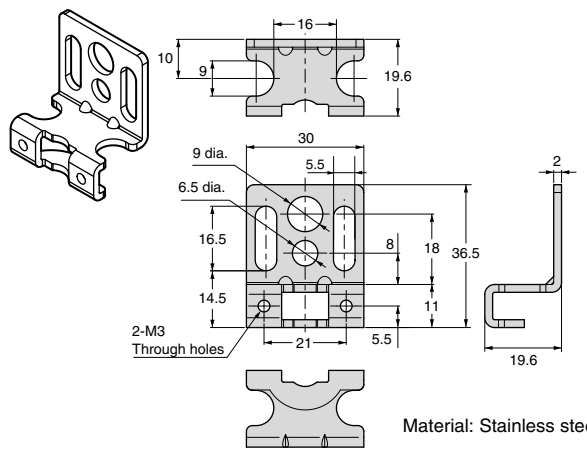

Material: Stainless steel

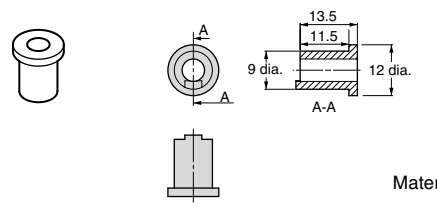

Material: Brass

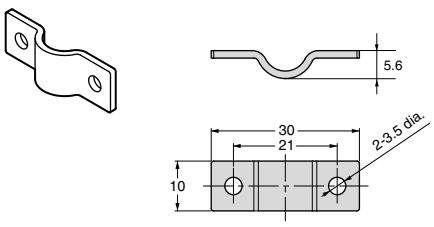

Material:

Using Side Flat Mounting Bracket (F39-LJ2)

F39-LJ2
Material: Stainless steel

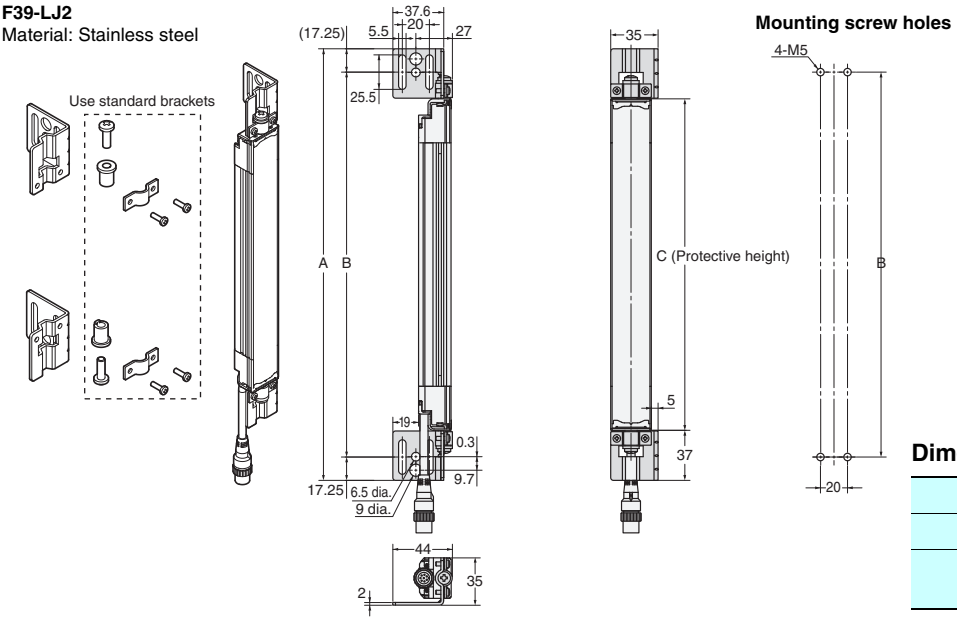

Dimensions A to C

A	C + 74
B	C + 39.5
C	4-digit number of the model name (protective height)

Using Free Location Mounting Bracket (F39-LJ3)

Backside mounting

F39-LJ3
Material: Zinc die-cast
Horizontal angle: ±10°

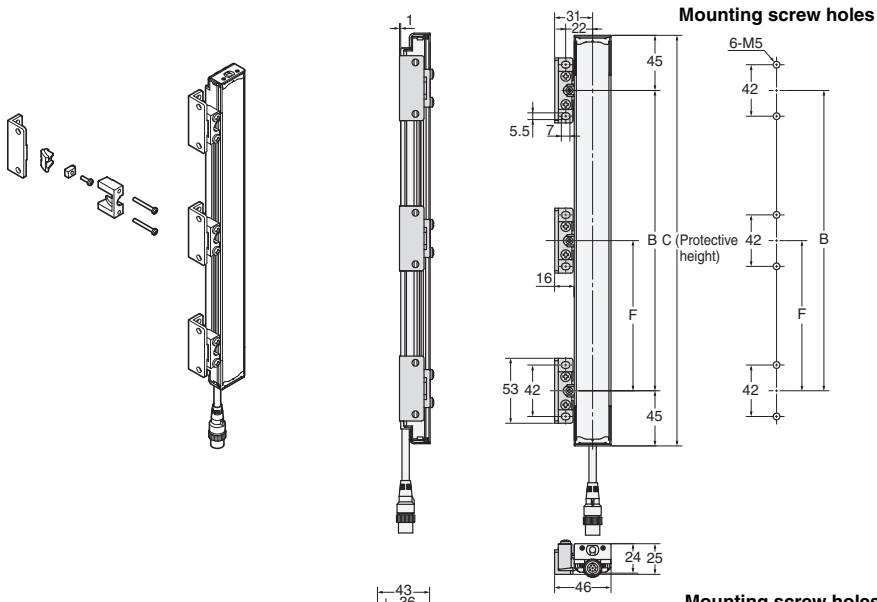

Side mounting

F39-LJ3
Material:Zinc die-cast/ stainless
Horizontal angle: ±10°

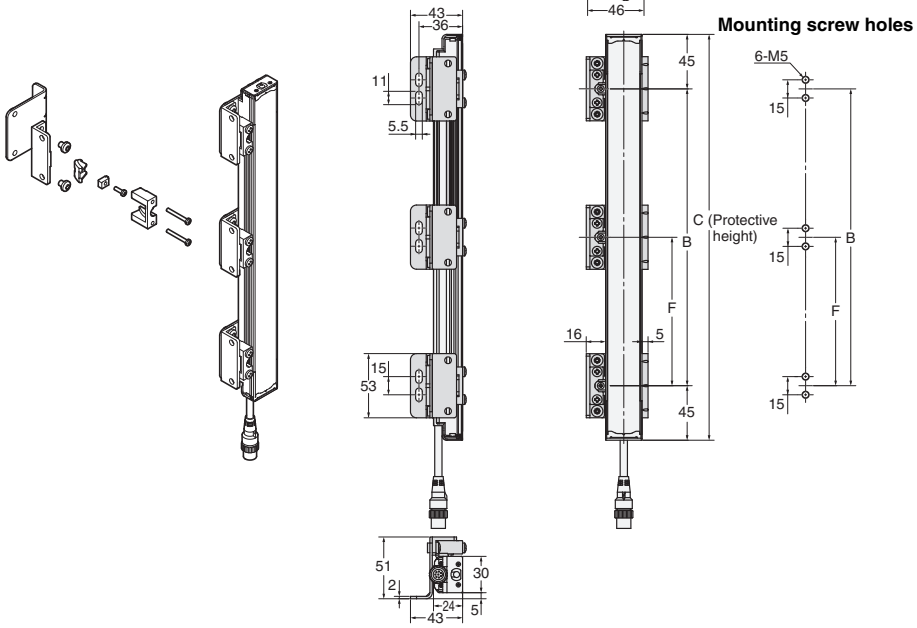

Dimensions B, C, and F

B	C - 90
C	4-digit number of the model name (protective height)
F	Depends on the protective height. See the table on the right.

Dimensions F

Protective height	Number of intermediate brackets	F ✻
245 to 440	2	---
443 to 785	3	B/2
794 to 1,140	4	B/3
1,145 to 1,490	5	B/4
1,495 to 1,840	6	B/5
1,845 to 2,180	7	B/6
2,195 to 2,500	8	B/7

✻Use F = 350 or less when none of the F values shown above are used.

When only F39-LJ3 free-location mounting brackets are used without standard brackets, allow a space of at least 350 mm between the brackets. The number of brackets required varies according to the protective height. For details about the number of required brackets, refer to the table below.
The standard included intermediate brackets are the same as the F39-LJ3 free-location mounting brackets. Purchase brackets as necessary if there are fewer intermediate brackets than required. When intermediate brackets are included, they can be used as free-location mounting brackets.

Required number of F39-LJ3 free-location mounting brackets for 1 F3SJ set (emitter/receiver) (2 pieces are included with F39-LJ3)

Protective height	Number of included free location brackets as intermediate brackets	Number of free location brackets to mount F3SJ	Number of free location bracket sets to be purchased (pcs)
245 to 440	0	4	2 sets (4)
443 to 596	0	6	3 sets (6)
600 to 785	2	6	2 sets (4)
794 to 1,130	2	8	3 sets (6)
1,136 to 1,140	4	8	2 sets (4)
1,145 to 1,490	4	10	3 sets (6)
1,495 to 1,658	4	12	4 sets (8)
1,660 to 1,840	6	12	3 sets (6)
1,845 to 2,180	6	14	4 sets (8)
2,195 to 2,500	8	16	4 sets (8)

Using Top/Bottom Bracket B (F39-LJ4)

Backside mounting

F39-LJ4
Material: Stainless steel

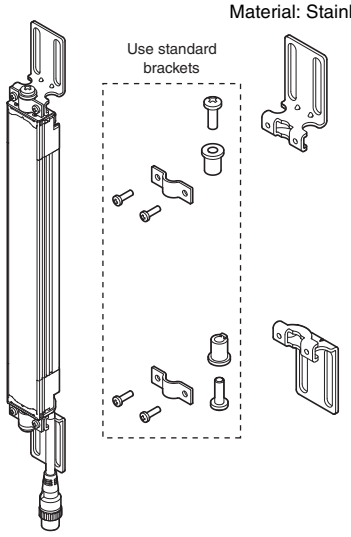

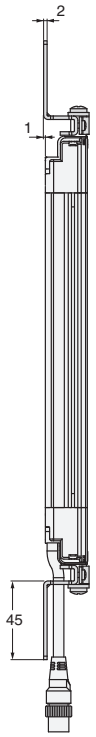

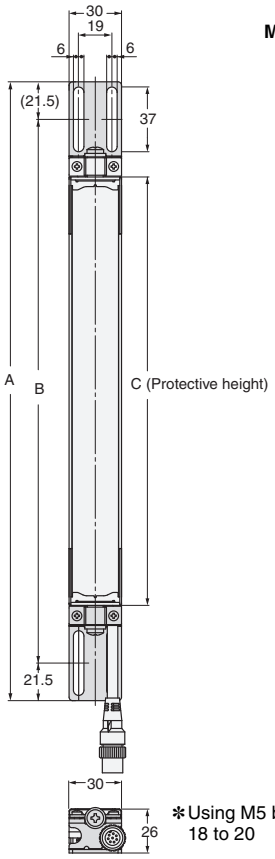

Mounting screw holes

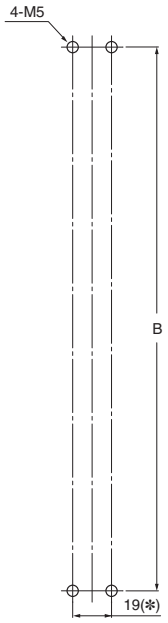

✻Using M5 bolt, available range for mounting is 18 to 20

Dimensions A to C

A	C + 109
B	C + 66
C	4-digit number of the model name (protective height)

Note: Refer to the User's Manual for the dimensions for side mounting.

Using Top/Bottom Bracket C (F39-LJ11)

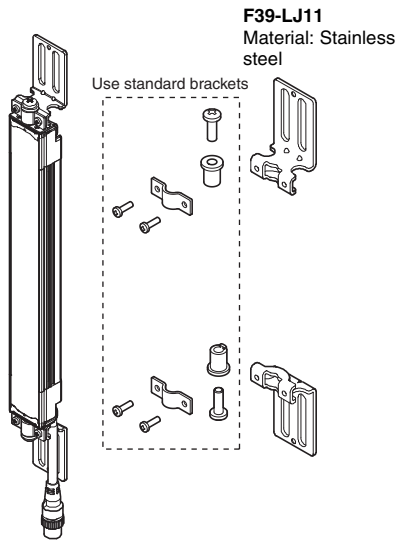

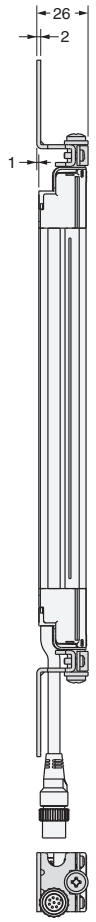

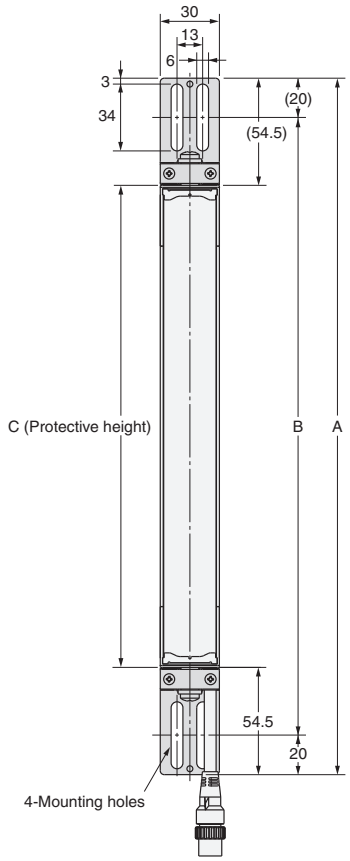

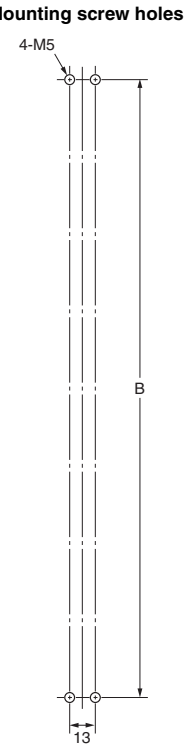

Dimensions A to C

A	C + 109
B	C + 69
C	4-digit number of the model name (protective height)

Using Space-saving Mounting Bracket (F39-LJ8)

Backside mounting

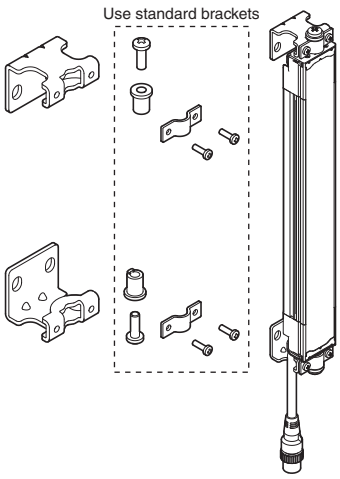

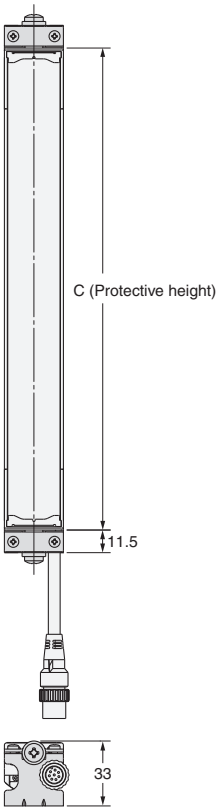

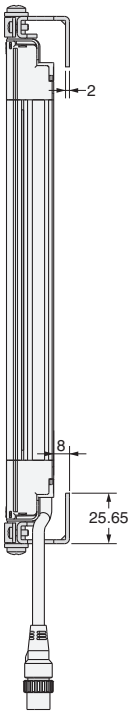

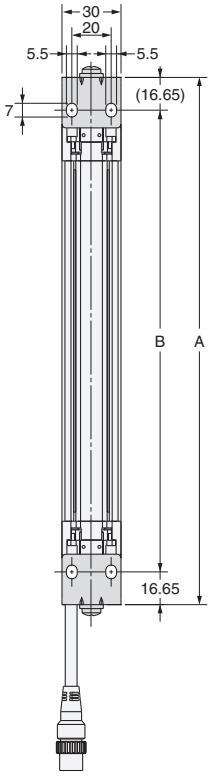

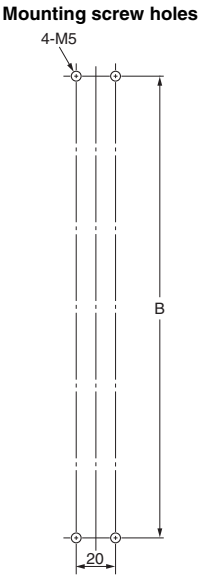

Dimensions A to C

A	C + 23
B	C - 10.3
C	4-digit number of the model name (protective height)

Note: Because the F39-LJ8 cannot be mounted together with an intermediate bracket, keep the protective height at 600 mm max.

Guide to Replacing F3SJ-A with F3SJ-E/B (Including models whose production will be discontinued)

F3SJ-A to F3SJ-E/B replacement correspondence table (F3SJ-A mounting holes can be used without modification)

To check available brackets for replacement, refer to the table below.
To check dimensions when mounting brackets, refer to page 93.
The values in the table correspond to in the model name, meaning the protective height (mm) of a sensor.

F3SJ-A			Replacement F3SJ-E/B	Available bracket for replacement	
□□□□P(N)20	□□□□P(N)25	□□□□P(N)30	□□□□P(N)25	Top/bottom bracket (F39-LJB1)	Compatible bracket (F39-LJB4)
0245 0260 0275 0290	0260 0280	0245 0270 0295	0225		✓
	0300		0305	✓	✓
0305 0320 0335 0350 0365	0320 0340 0360	0320 0345 0370			✓
0380	0380		0385	✓	✓
0395 0410 0425 0440 0455	0400 0420 0440	0395 0420 0445			✓
	0460		0465	✓	✓
0470 0485 0500 0515 0530	0480 0500 0520	0470 0495 0520			✓
	0540		0545	✓	✓
0545 0560 0575 0590 0605	0560 0580 0600	0545 0570 0595			✓
0620	0620	0620	0625	✓	✓
0635 0650 0665 0680 0695	0640 0660 0680	0645 0670 0695			✓
	0700		0705	✓	✓
0710 0725 0740 0755 0770	0720 0740 0760	0720 0745 0770			✓
	0780		0785	✓	✓
0785 0800 0815 0830 0845	0800 0820 0840	0795 0820 0845			✓
0860	0860		0865	✓	✓
0875 0890 0905 0920 0935	0880 0900 0920	0870 0895 0920			✓
	0940		0945	✓	✓
0950 0965 0980 0995 01010	0960 0980 01000	0945 0970 0995			✓
	1020	1020	1025	✓	✓
1025 1040 1055 1070 1085 1100	1040 1060 1080	1045 1070 1095			✓
	1100		1105	✓	✓
1115 1130 1145 1160 1175	1120 1140 1160	1120 1145 1170			✓

F3SJ-A			Replacement F3SJ-B	Available bracket for replacement	
□□□□P(N)20	□□□□P(N)25	□□□□P(N)30	□□□□P(N)25	Top/bottom bracket (F39-LJB1)	Compatible bracket (F39-LJB4)
	1180		1185	✓	✓
1190 1205 1220 1235 1250	1200 1220 1240	1195 1220 1245			✓
	1260		1265	✓	✓
1265 1280 1295 1310 1325	1280 1300 1320	1270 1295 1320			✓
1340	1340		1345	✓	✓
1355 1370 1385 1400 1415	1360 1380 1400	1345 1370 1395			✓
	1420	1420	1425	✓	✓
1430 1445 1460 1475 1490	1440 1460 1480	1445 1470 1495			✓
	1500		1505	✓	✓
1505 1520 1535 1550 1565	1520 1540 1560	1520 1545 1570			✓
1580	1580		1585	✓	✓
1595 1610 1625 1640 1655	1600 1620 1640	1595 1620 1645			✓
	1660		1665	✓	✓
1670 1685 1700 1715 1730	1680 1700 1720	1670 1695 1720			✓
	1740		1745	✓	✓
1745 1760 1775 1790 1805	1760 1780 1800	1745 1770 1795			✓
1820	1820	1820	1825	✓	✓
1835 1850 1865 1880 1895	1840 1860 1880	1845 1870 1895			✓
	1900		1905	✓	✓
1910 1925 1940 1955 1970	1920 1940 1960	1920 1945 1970			✓
	1980		1985	✓	✓
1985 2000 2015 2030 2045	2000 2020 2040	1995 2020 2045			✓
2060	2060		2065	✓	✓
2075 2090 2105 2120 2135	2080 2100 2120	2070 2095 2120			✓

Note: 1. Protective height and detection capability vary according to replacement. Check the safe design of your device before use.
2. The maximum protective height of F3SJ-E is 1,105 mm. Only the F3SJ-B can be replaced for the protective height of 1,185 or more.

Change of Dimensions due to Replacement

(1) Replacement by backside mounting

	F3SJ-A (Using standard bracket)	F3SJ-E/B (Top/bottom bracket used)	F3SJ-E/B (Compatible bracket used)
Dimensions (mm) from mounting wall surface to optical surface (mm)	26	43	43
Total length including bracket (mm)	Protective height + 74	Protective height + 69	Protective height + 159

Dimensional drawing from mounting wall surface to optical surface

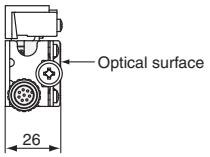

F3SJ-A

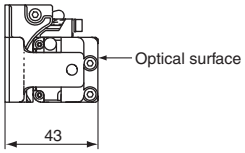

F3SJ-E/B

(2) Replacement by side mounting

	F3SJ-A (Using standard bracket)	F3SJ-E/B (Top/bottom bracket used)	F3SJ-E/B (Compatible bracket used)
Dimensions of a protrusion from mounting wall (mm)	51	46	46
Total length including bracket (mm)	Protective height +74	Protective height +69	Protective height +159

Dimensional drawing of a protrusion from mounting wall

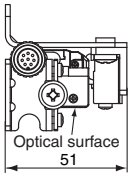

F3SJ-A

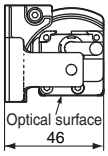

F3SJ-E/B

Replacement using intermediate brackets

For backside mounting, the F3SJ-A and F3SJ-E/B can be used without modification due to compatibility in mounting hole pitch. For side mounting, a new hole needs to be made due to the different mounting hole pitch.

Mounting hole pitch for side mounting using intermediate bracket

	F3SJ-A (Free-location bracket used)	F3SJ-E/B (Intermediate bracket used)
Mounting hole pitch (mm)	15	42

Dimensional drawing of mounting hole for side mounting using intermediate bracket

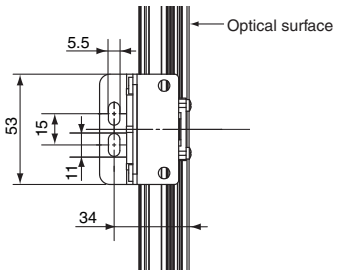

F3SJ-A

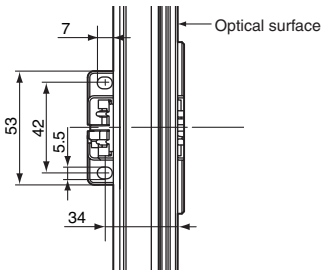

F3SJ-E/B

Change of Dimensions due to Replacement

	F3SJ-A (Free-location bracket used)	F3SJ-E/B (Intermediate bracket used)
Dimensions (mm) from mounting wall surface to optical surface (mm)	26	43

Using mounting bracket for short-length F3SN (F39-LJ5)

Inward-facing mounting

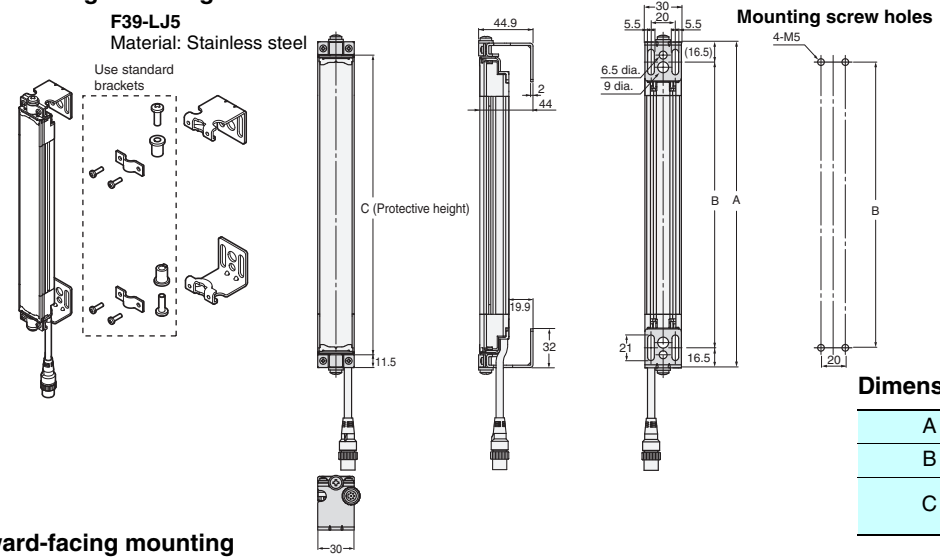

Dimensions A to C

A	C + 23
B	C - 10
C	4-digit number of the model name (protective height)

Outward-facing mounting

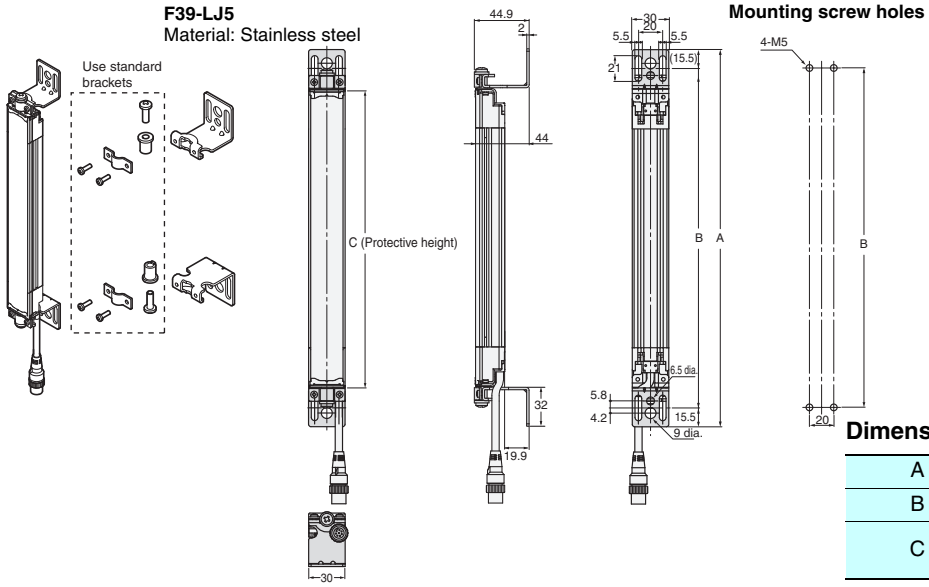

Dimensions A to C

A	C + 65
B	C + 34
C	4-digit number of the model name (protective height)

Inward + outward-facing mounting

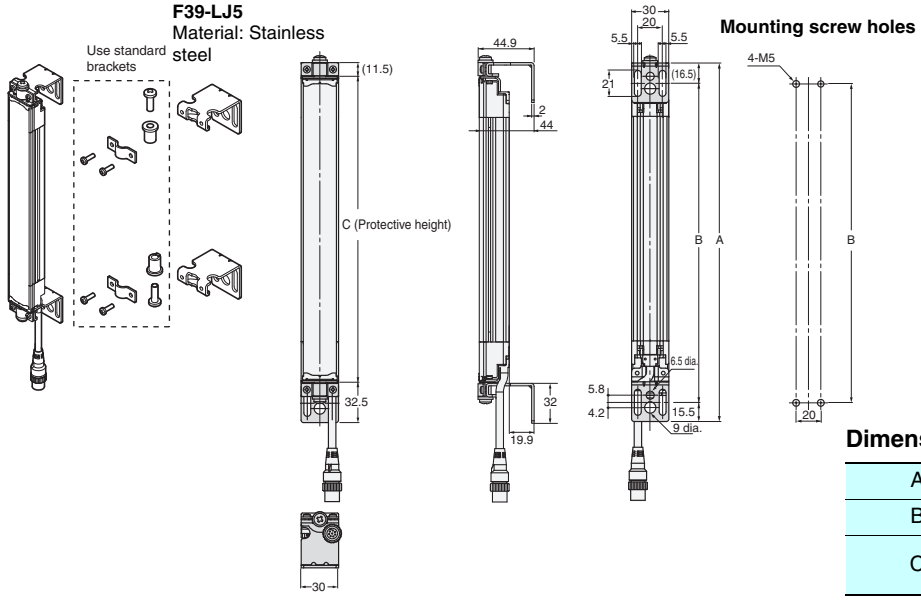

Dimensions A to C

A	C + 44
B	C + 12
C	4-digit number of the model name (protective height)

Accessories

Single-Ended Cable

F39-JD3A (L = 3 m)
F39-JD7A (L = 7 m)
F39-JD10A (L = 10 m)
F39-JD15A (L = 15 m)
F39-JD20A (L = 20 m)

Cable color: Gray for emitter
Black for receiver

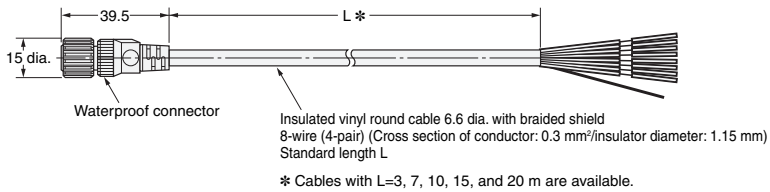

✻ Cables with L=3, 7, 10, 15, and 20 m are available.

Double-Ended Cable

F39-JDR5B (L = 0.5 m)
F39-JD1B (L = 1 m)
F39-JD3B (L = 3 m)
F39-JD5B (L = 5 m)
F39-JD7B (L = 7 m)
F39-JD10B (L = 10 m)
F39-JD15B (L = 15 m)
F39-JD20B (L = 20 m)

Cable color: Gray for emitter
Black for receiver

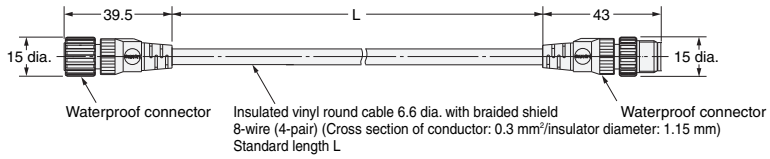

Simple Wiring Connector

F39-CN5

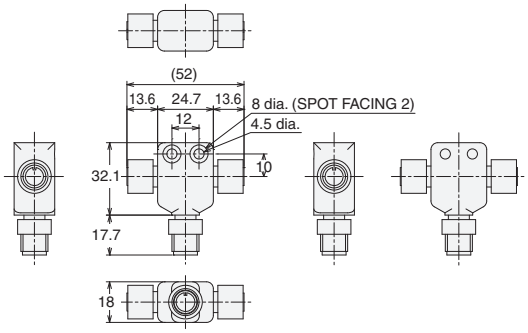

Control Unit

F3SP-B1P

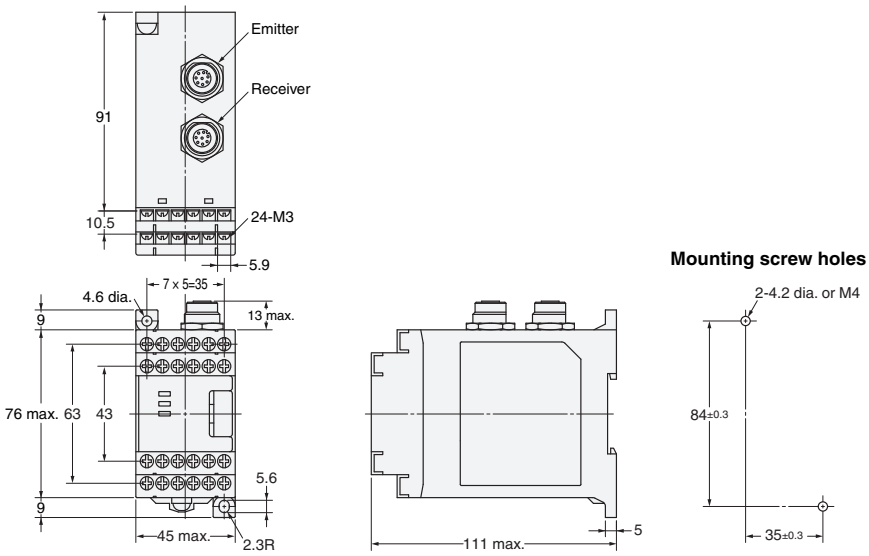

Laser Pointer

F39-PTJ

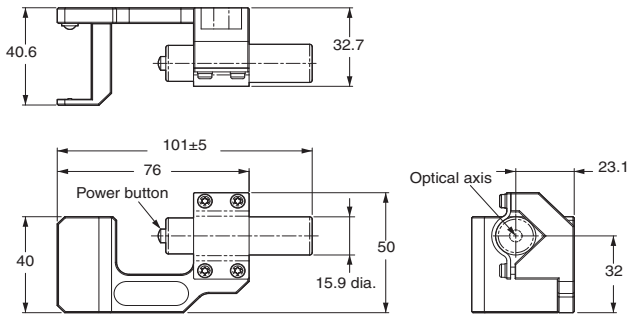

Dedicated External Indicator Set
F39-A01□-PAC

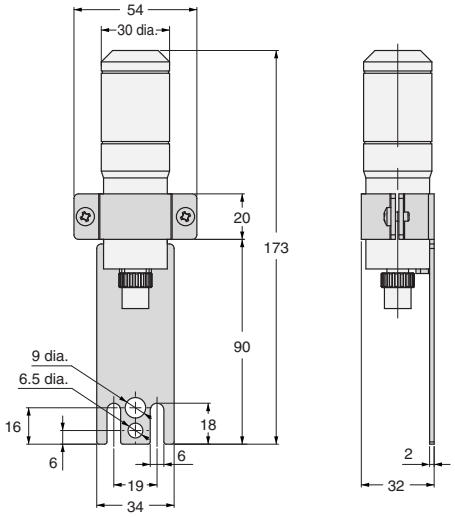

Material: Stainless steel

Spatter Protection Cover
F39-HJ□□□□

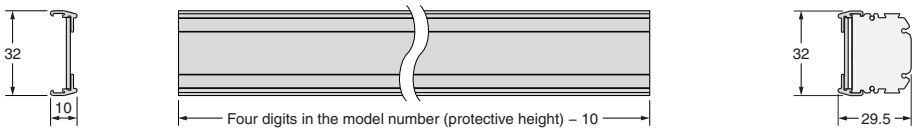

Assembled dimensions

Material: PC (transparent area)
ABS (non-transparent area)

Mirrors
F39-MLG□

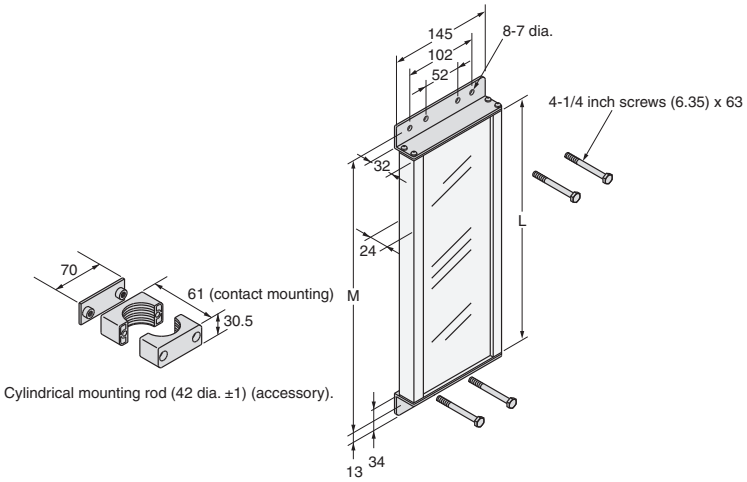

Model	L (mm)	M (mm)
F39-MLG0406	445	487
F39-MLG0610	648	690
F39-MLG0711	749	792
F39-MLG0914	953	995
F39-MLG1067	1,105	1,148
F39-MLG1219	1,257	1,300
F39-MLG1422	1,461	1,503
F39-MLG1626	1,664	1,706
F39-MLG1830	1,867	1,910
F39-MLG2134	2,172	2,214

Setting Support Software for the F3SJ
F39-GWUM

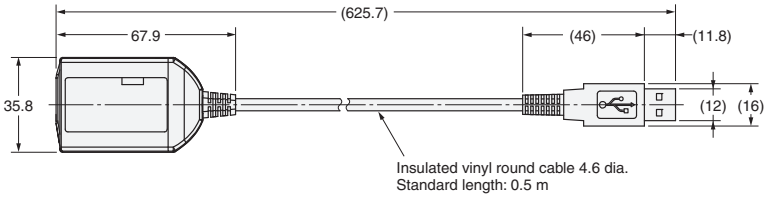

Protective Bar

F39-PJ□□□□-S

Backside mounting

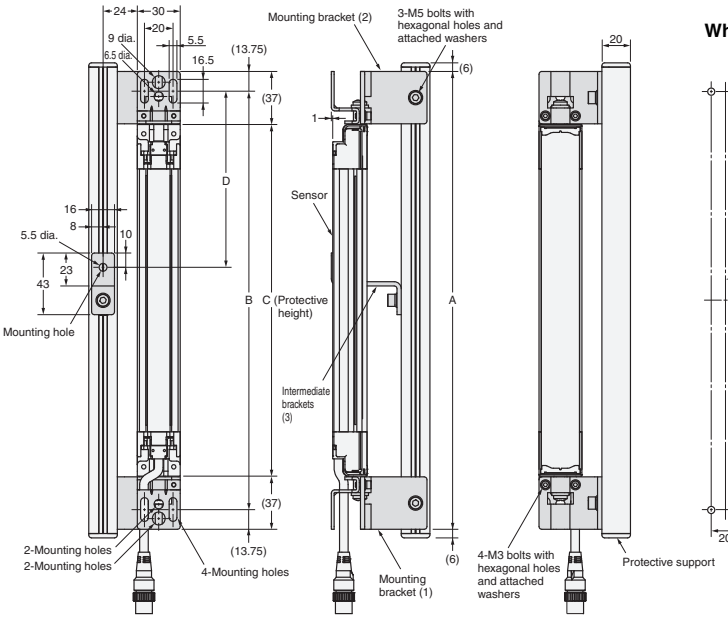

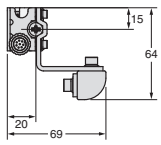

Mounting screw holes

When using M5

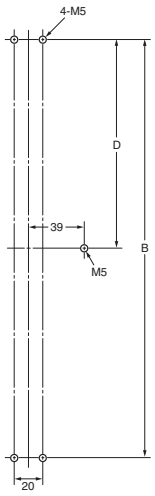

When using M6, M8

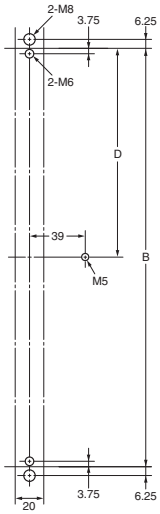

C (protective height): 4-digit number in the table
A = C + 74,
B = C + 46.5

Protective height	Number of intermediate brackets used (3)	D
245 to 995	0	---
1,001 to 2,000	1	B/2
2,009 to 2,500	2	B/3

Note: For reference, D is the dimension that will not interfere with the intermediate bracket on the Safety Light Curtain body.

Side mounting

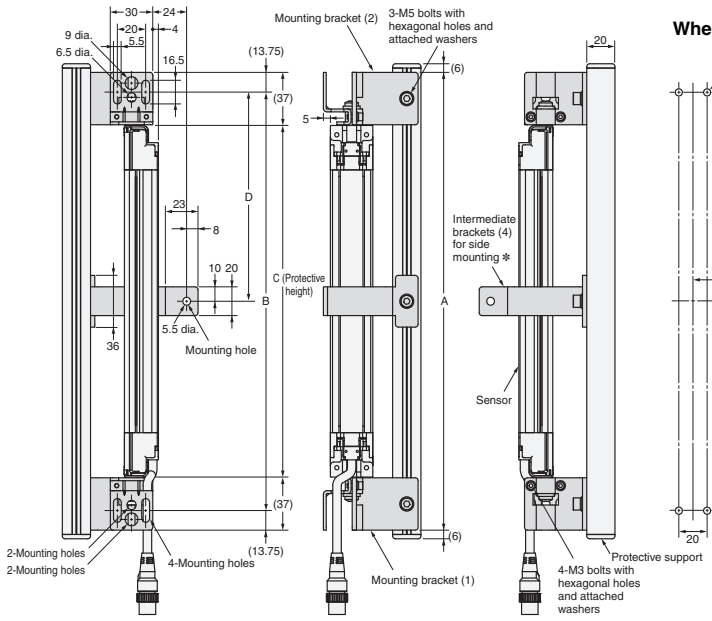

Mounting screw holes

When using M5

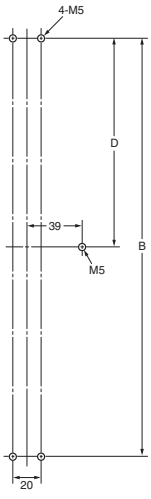

When using M6, M8

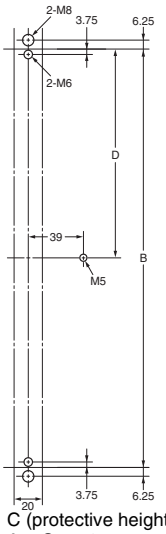

C (protective height): 4-digit number in the table
A = C + 74,
B = C + 46.5

✻The four intermediate brackets (F39-PJ-MS) for side mounting are not provided.

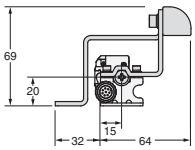

Protective height	Intermediate brackets for side mounting Number of intermediate brackets used (4)	D
245 to 995	0	---
1,001 to 2,000	1	B/2
2,009 to 2,500	2	B/3

Note: For reference, D is the dimension that will not interfere with the intermediate bracket on the Safety Light Curtain body.

Water-resistant Case

F39-EJ□□□□-L(D)
Backside mounting

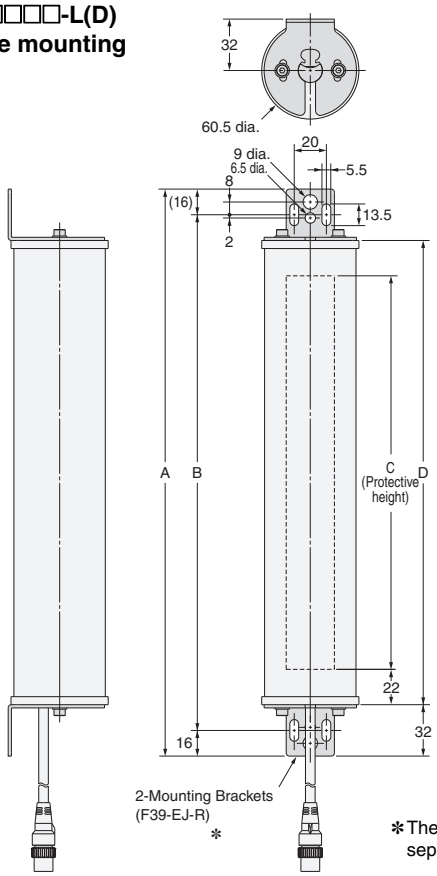

Mounting screw holes

When using M5 **When using M6, M8**

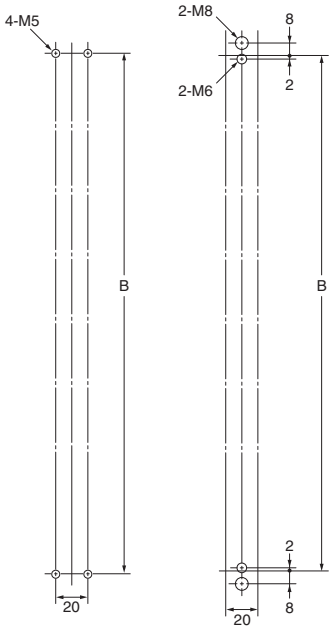

*The Mounting Brackets (F39-EJ-R) are sold separately.

Dimensions A to D

A	C + 108
B	C + 76
C	4-digit number of the model name (protective height)
D	C + 44

Side mounting

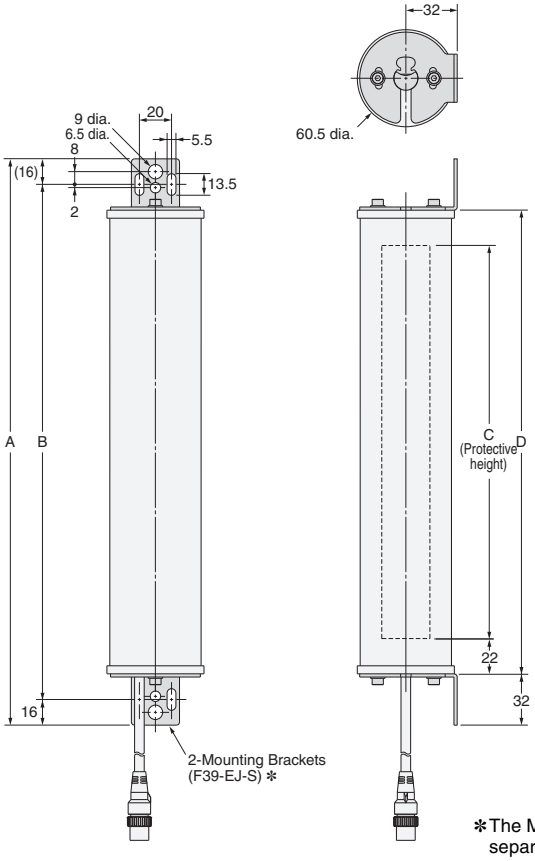

Mounting screw holes

When using M5 **When using M6, M8**

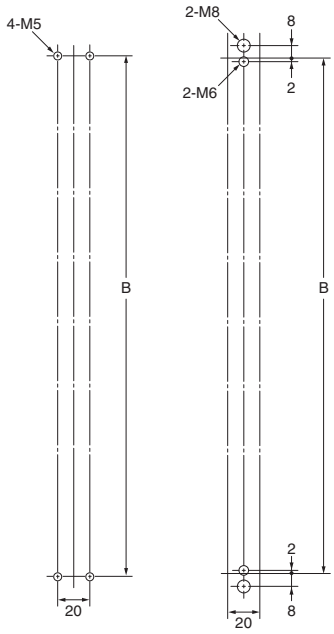

*The Mounting Brackets (F39-EJ-S) are sold separately.

Dimensions A to D

A	C + 108
B	C + 76
C	4-digit number of the model name (protective height)
D	C + 44

Function List

Functions that can be used on F3SJ are shown as follows: Refer to the F3SJ User's Manual for details. For manual number, check the "*Related Manuals*" at the end of the catalog.

✓: Can be used.
X: Cannot be used.

Basic functions

Function	F3SJ-E (EASY)	F3SJ-B (BASIC)	F3SJ-A (ADVANCED)
Self-test function	✓	✓	✓
External test function	✓	✓	✓
External device monitoring function	X	✓ ✻1	✓
Interlock function	X	✓ ✻1	✓
Auxiliary output function	X	✓	✓
Muting function ✻2	X	✓	✓

✻1. Cannot be used at muting.
✻2. The muting time for the F3SJ-A can be set via the software tool. The muting time for the F3SJ-B cannot be changed.

Functions for individual applications

Override function	X	✓	✓
Partial muting function	X	X	✓
Position detection muting function	X	X	✓
Fixed blanking function	X	X	✓
Floating blanking function	X	X	✓
Warning zone function	X	X	✓
Use of setting tools	X	X	✓

Wiring/mounting related function

Series connection function	X	✓	✓
Dead space less (single connection)	✓	✓	✓
Dead space less (series connection)	X	X	✓
Response time integration (15 ms) ✻3	✓	✓	X
Simple wiring	✓	X	X
Connector cable	X	✓	✓
Quick mounting	✓	✓	X
TOP/BOTTOM indicator for beam adjustment	✓	✓	X
Laser Pointer	✓	✓	✓

✻3. Convenient to calculate safety distance.

Indicator related functions

External indicator output	X	✓ ✻4	✓ ✻5
Muting error display	X	✓	X

Note: The specifications of the models with the suffixes "-01TS", "-02TS" or "-TS" are different.
Refer to the Specifications.
✻4. An external Indicator can be connected to the F3SJ-B auxiliary output .
✻5. An external Indicator can be connected to the F3SJ-A auxiliary output 1 and 2, external Indicator 1 and 2 .

Self-test Function
A self-test is performed to check for errors when the power is turned ON. Also, the self-test is regularly performed (within the response time) while operating.

External Test Function
This function stops the emission using an external signal. It can be used to verify that a safety system should properly stop when F3SJ is interrupted.

External Device Monitoring Function
This function detects malfunctions, such as welding, in external relays (or contactors) that control the hazardous part of a machine.
This function constantly monitors that a specified voltage is applied to the receiver's external device monitoring input line, and the system enters lockout state when an error occurs. The relay's operational delay can be up to 300 ms without being evaluated as an error.
For example, if the normally closed N.C. contact does not close within 0.3 s after the safety outputs turn from ON to OFF, and a specified voltage is not applied to the external device monitoring line, it is evaluated as an error and the system enters a lockout state. To utilize this function properly, use safety relays and contactors that have force guided or mechanically linked contact structure.

Interlock Function
The F3SJ turns the safety outputs OFF when its power is turned on or its beam is interrupted and holds this state until reset input is applied. This state is called "interlock".
Two methods can be used to reset the interlock state: "auto reset that automatically turns control outputs ON when the interrupting object is removed" and "manual reset mode that keeps control outputs OFF until a reset signal is provided, if the interrupting object is removed".

Auto Reset
When the interrupting object is removed from the detection zone, the safety outputs automatically turn ON. Auto reset is used on machines where a worker is not able to enter the area between the detection zone and the hazardous part of the machine.

Manual Reset
When a reset input is given while no interrupting object exists in a detection zone, the safety outputs turn ON. This allows the machine to be manually reset using a reset switch after ensuring safety, preventing unexpected startup.

Auxiliary Output Function
The auxiliary output is used to monitor the status of the F3SJ. This output can be connected to a device such as programmable controller.

Muting Function
Muting function temporarily disables safety function of the F3SJ, keeping safety output ON even if beams are interrupted.
This makes it possible to install safety light curtains for AGV passage, enabling both safety and productivity.

Override Function
The override function turns the safety outputs ON when the muting start condition is not satisfied. If a workpiece stops while passing through the F3SJ, as shown below, causing a muting error, the normal state cannot be recovered unless the workpiece is removed from the muting sensors and the detection field of the F3SJ. However, the override function will mute the safety outputs of the F3SJ so that the conveyor can be restarted to move the workpiece out of the muting sensors and detection zone.

Partial Muting Function
Partial muting function secures safety without enabling muting except for beams when a workpiece passes.

Position Detection Muting
A limit switch or other means is used to detect when the robot is in a safe position, and muting is then applied.

Fixed Blanking Function
Fixed blanking function disables a specific beam of the F3SJ. This function keeps safety output ON even when part of machinery equipment exists within a detection zone.

Floating Blanking Function
Floating blanking function increases the diameter of the F3SJ's detection capability and turns OFF the safety output when multiple objects are detected. When there is a moving object with a fixed width in the detection area that we do not want to detect, the detection function can be disabled.

Warning Zone Function
When an individual enters, a warning lamp lights or buzzer sounds without stopping the equipment by dividing the detection zone into the detection zone and a warning zone.

Setting Tool
The following setting tools (sold separately) can be purchased in order to change or confirm various F3SJ-A parameters.
- F39-MC21 Setting Console
- F39-GWUM SD Manager Setting Support Software for the F3SJ

Series Connection Function
Up to 3 sets of the F3SJ-Bs or up to 4 sets of F3SJ-As can be series-connected. Series connection allows them to be used as a safety light curtain, requiring only one set to be wired to a controller and preventing mutual interference.

Safety Precautions

Description shown below is only a guideline to choose a safety sensor. To use the product properly, you must read its instruction manual that comes with the product.

Legislation and Standards

1. Application of a sensor alone cannot receive type approval provided by Article 44-2 of the Industrial Safety and Health Act of Japan. It is necessary to apply it in a system.
   Therefore, when using the F3SJ in Japan as a "safety system for pressing or shearing machines" prescribed in Article 42 of that law, the system must receive type approval.

2. The F3SJ is electro-sensitive protective equipment (ESPE) in accordance with European Union (EU) Machinery Directive Index Annex V, Item 2.

3. The F3SJ-E/B is in conformity with the following standards:
   (1) EC legislation
   Machinery Directive 2006/42/EC
   EMC Directive 2014/30/EU
   (2) European standards
   EN 61496-1 (type 4 ESPE),
   EN 61496-2 (type 4 AOPD),
   EN 61508-1 through -3 (SIL3),
   EN 61000-6-4,
   EN ISO 13849-1:2015 (PLe/Safety Category 4)
   (3) International standards
   IEC 61496-1 (type 4 ESPE),
   IEC 61496-2 (type 4 AOPD),
   IEC 61508-1 through -3 (SIL3),
   ISO 13849-1:2015 (PLe/Safety Category 4)
   (4) JIS standards
   JIS B 9704-1 (type 4 ESPE),
   JIS B 9704-2 (type 4 AOPD)
   (5) North American standards:
   UL 61496-1 (type 4 ESPE),
   UL 61496-2 (type 4 AOPD),
   UL 508, UL 1998, CAN/CSA C22.2 No.14,
   CAN/CSA C22.2 No.0.8

4. The F3SJ-A is in conformity with the following standards:
   (1) EC legislation
   Machinery Directive 2006/42/EC
   EMC Directive 2014/30/EU
   (2) European standards
   EN 61496-1 (type 4 ESPE),
   EN 61496-2 (type 4 AOPD),
   EN61508-1 through -3 (SIL3)
   EN ISO 13849-1:2015 (PLe/Safety Category 4)
   (3) International standardsl
   EC 61496-1 (type 4 ESPE),
   IEC 61496-2 (type 4 AOPD),
   IEC 61508-1 through -3 (SIL3)
   ISO13849-1: 2015 (PLe/Safety Category 4)
   (4) JIS standards
   JIS B 9704-1 (type 4 ESPE),
   JIS B 9704-2 (type 4 AOPD)
   (5) North American standards:
   UL 61496-1 (type 4 ESPE),
   UL 61496-2 (type 4 AOPD),
   UL 508, UL 1998, CAN/CSA C22.2 No.14,
   CAN/CSA C22.2 No.0.8

5. The F3SJ received the following certification from the EU-accredited body, TÜV SÜD:
   - EC type test based on machinery directive
     Type 4 ESPE (EN 61496-1),
     Type 4 AOPD (EN 61496-2)

6. The F3SJ is scheduled to received certificates of UL listing for US and Canadian safety standards from the Third Party Assessment Body UL.
   - Type 4 ESPE (UL 61496-1),
     Type 4 AOPD (UL 61496-2)

7. The F3SJ is designed according to the standards listed below. To make sure that the final system complies with the following standards and regulations, you are asked to design and use it in accordance with all other related standards, laws, and regulations. If you have any questions, consult with specialized organizations such as the body responsible for prescribing and/or enforcing machinery safety regulations in the location where the equipment is to be used.
   - European standards: EN 415-4, EN 692, EN 693
   - US Occupational Safety and Health Standards: OSHA 29 CFR 1910.212
   - US Occupational Safety and Health Standards: OSHA 29 CFR 1910.217
   - American National Standards: ANSI B11.1 to B11.19
   - American National Standards: ANSI/RIA 15.06
   - Canadian Standards Association CSA Z142, Z432, Z434
   - SEMI Standards SEMI S2

8. We have obtained S-Mark Certification from Legislation and Standards Korea Occupational Safety & Health Agency (KOSHA). (F3SJ-A□□□□P□□-S series only)

Precautions on Safety

Indication and meaning for safe use

This instruction manual describes notification and/or waning with indication and symbols as shown below for safe use of F3SJ. This notification describes very important details for safety. You must follow the description. Shown below are indication and symbols.

⚠ WARNING	**Indicates a potentially hazardous situation which, if not avoided, will result in minor or moderate injury, or may result in serious injury or death. Additionally there may be significant property damage.**
⚠ CAUTION	**If you fail to use a product properly, it may result in injuries or damage on property.**

Meanings of Alert Symbols

⃠	**Inhibited** **Indicates general inhibition.**

Alert Statements in this Manual

F3SJ-E . . . . . **Description applied to F3SJ-E models.**

F3SJ-B . . . . . **Description applied to F3SJ-B models.**

F3SJ-A . . . . . **Description applied to F3SJ-A models.**

For users

⚠ WARNING

F3SJ-E F3SJ-B F3SJ-A

The FS3J must be installed, set, and integrated into the mechanical control system by a qualified technician who has received the appropriate training. Failure to make correct settings may prevent detection of people and result in serious injury.

F3SJ-A

When changing parameters with a setting tool (F39-GWUM or F39-MC21), the change must be made and the contents of the change must be managed by the person in charge of the system. Unintentional or mistaken parameter changes may prevent detection of people and result in serious injury.

For machines

⚠ WARNING

F3SJ-E F3SJ-B F3SJ-A

Do not use this sensor for machines that cannot be stopped by electrical control. For example, do not use it for a pressing machine that uses full-rotation clutch. Otherwise, the machine may not stop before a person reaches the hazardous part, resulting in serious injury.

F3SJ-B F3SJ-A

Do not use the auxiliary output or external indicator output for safety applications. Human body may not be detected when F3SJ fails, resulting in serious injury.

For installation

⚠ WARNING

F3SJ-E F3SJ-B F3SJ-A

Make sure to test the operation of the F3SJ after installation to verify that the F3SJ operates as intended. Make sure to stop the machine until the test is complete.
Unintended function settings may cause a person to go undetected, resulting in serious injury.

F3SJ-E F3SJ-B F3SJ-A

Make sure to install the F3SJ at the safe distance from the hazardous part of the equipment. Otherwise, the machine may not stop before a person reaches the hazardous part, resulting in serious injury.

F3SJ-E F3SJ-B F3SJ-A

Install a protective structure so that the hazardous part of a machine can only be reached by passing through the sensor's detection zone. Install the sensors so that part of the person is always present in the detection zone when working in a machine's hazardous zones. If a person is able to step into the hazardous zone of a machine and remain behind the 's detection zone, configure the system with an interlock function that prevents the machine from being restarted. Otherwise it may result in heavy injury.

F3SJ-B F3SJ-A

Install the interlock reset switch in a location that provides a clear view of the entire hazardous area and where it cannot be activated from within the hazardous area.

F3SJ-E F3SJ-B F3SJ-A

The F3SJ cannot protect a person from a projectile exiting the hazardous zone. Install protective cover(s) or fence(s).

F3SJ-A

When detection of an area has been disabled by the fixed blanking function, provide a protective structure around the entire area that will prevent a person from passing through it and reaching the hazardous part of the machinery. Failure to do so may prevent detection of people and result in serious injury.

F3SJ-A

After setting the fixed blanking function, be sure to confirm that a test rod is detected within all areas that require detection. Failure to do so may prevent detection of people and result in serious injury.

F3SJ-A

When the fixed blanking function or the floating blanking function is used, the diameter for the smallest detectable object becomes larger. Be sure to use the diameter for the smallest detectable object for the fixed blanking function or the floating blanking function when calculating the safety distance. Failure to do so may prevent the machinery from stopping before a person reaches the hazardous part of the machinery, and result in serious injury.

F3SJ-B F3SJ-A

The muting and override functions disable the safety functions of the device. Additional safety measures must be taken to ensure safety while these functions are working.

F3SJ-B F3SJ-A
Install muting sensors so that they can distinguish between the object that is being allowed to be pass through the detection zone and a person. If the muting function is activated by the detection of a person, it may result in serious injury.

F3SJ-B F3SJ-A
Muting lamps (external indicators) that indicate the state of the muting and override functions must be installed where they are clearly visible to workers from all the operating positions.

F3SJ-A
Muting times must be precisely set according to the application by qualified personnel who have received appropriate training. In particular, if the muting time limit is to be set to infinity, the person who makes the setting must bear responsibility.

F3SJ-B F3SJ-A
Use two independent input devices for the muting inputs.

F3SJ-B F3SJ-A
Install the F3SJ, Muting Sensors, or a protective wall so that workers cannot enter hazardous areas while muting is in effect, and set muting times.

F3SJ-B F3SJ-A
Position the switch that is used to activate the override function in a location where the entire hazardous area can be seen, and where the switch cannot be operated from inside the hazardous area. Make sure that nobody is in the hazardous area before activating the override function.

F3SJ-E F3SJ-B F3SJ-A
Install the sensor system so that it is not affected by reflective surfaces. Failure to do so may hinder detection, resulting in serious injury.

F3SJ-E F3SJ-B F3SJ-A
When using more than 1 set of F3SJ, install them so that mutual interference does not occur, such as by configuring series connections or using physical barriers between adjacent sets.

F3SJ-E F3SJ-B F3SJ-A
Make sure that the F3SJ is securely mounted and its cables and connectors are properly secured.

F3SJ-E F3SJ-B F3SJ-A
Make sure that no foreign material, such as water, oil or dust, enters the inside of the F3SJ while the cap is removed.

F3SJ-E F3SJ-B F3SJ-A
Do not use the sensor system with mirrors in a regressive reflective configuration. Doing so may hinder detection. It is possible to use mirrors to "bend" the detection zone to a 90-degree angle.

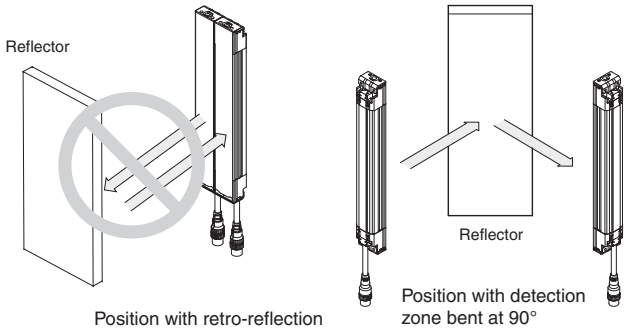

F3SJ-E F3SJ-B F3SJ-A
When using series connections, perform inspection of all connected F3SJs as instructed in the User's Manual.

For wiring

⚠ WARNING

F3SJ-E F3SJ-B F3SJ-A
[For PNP output]
Connect the load between the output and 0V line.
[For NPN output]
Connect the load between the output and +24V line. If +24 V and 0 V are connected, it is dangerous because operation mode is inversed to "ON when interrupted".

F3SJ-E F3SJ-B F3SJ-A
[For PNP output]
Do not short-circuit an output line to +24 V line. Otherwise, the output is always ON. Also, 0 V of the power supply must be grounded so that output should not turn ON due to grounding of the output line.
[For NPN output]
Do not short-circuit an output line to 0 V line. Otherwise, the output is always ON. Also, +24 V of the power supply must be grounded so that output should not turn ON due to grounding of the output line.

F3SJ-E F3SJ-B F3SJ-A
Configure the system by using the optimal number of safety outputs that satisfy the requirements of the necessary safety category.

F3SJ-E F3SJ-B F3SJ-A
Do not connect each line of F3SJ to a DC power supply higher than 24 V+20%. Also, do not connect to an AC power supply. Failure to do so may result in electric shock.

F3SJ-E F3SJ-B F3SJ-A

For F3SJ to comply with IEC 61496-1 and UL 508, the DC power supply unit must satisfy all of the following conditions:

- Must be within rated power voltage (24 VDC±20%).
- Must have tolerance against the total rated current of devices if it is connected to multiple devices.
- Must comply with EMC directives (industrial environment)
- Double or enhanced insulation must be applied between the primary and secondary circuits
- Automatic recovery of overcurrent protection characteristics (reversed L sagging)
- Output holding time must be 20 ms or longer
- Must satisfy output characteristic requirements for class 2 circuit or limited voltage current circuit defined by UL 508
- Must comply with EMC, laws, and regulations of a country or a region where F3SJ is used. (Ex: In EU, the power supply must comply to the EMC Low Voltage Directive)

F3SJ-E F3SJ-B F3SJ-A

Double or enhanced insulation from hazardous voltage must be applied to all input and output lines. Failure to do so may result in electric shock.

F3SJ-E F3SJ-B F3SJ-A

Note: Keep the cable length within the rated length. Failure to do so is dangerous as it may prevent safety functions from operating normally.

F3SJ-E F3SJ-B F3SJ-A

Make sure to perform wiring while the power supply is OFF.

Others F3SJ-E F3SJ-B F3SJ-A

⚠ WARNING

To use the F3SJ in PSDI mode (Reinitiation of cyclic operation by the protective equipment), you must configure an appropriate circuit between the F3SJ and the machine. For details about PSDI, refer to OSHA1910.217, IEC 61496-1, and other relevant standards and regulations.

Do not try to disassemble, repair, or modify this product. Doing so may cause the safety functions to stop working properly.

Do not use the F3SJ in environments where flammable or explosive gases are present. Doing so may result in explosion.

Perform daily and 6-month inspections for the F3SJ. Otherwise, the system may fail to work properly, resulting in serious injury.

Do not use radio equipment such as cellular phones, walkie-talkies, or transceivers near the F3SJ.

Note: For customers using the F3SJ-B□□□□P25-01TS:
The functions available are external test, lockout reset, auxiliary output and series connection.

Installation Conditions

Detection Zone and Approach F3SJ-E F3SJ-B F3SJ-A

⚠ WARNING

Install a protective structure so that the hazardous part of a machine can only be reached by passing through the sensor's detection zone. Install the sensors so that part of the person is always present in the detection zone when working in a machine's hazardous zones.
If a person is able to step into the hazardous zone of a machine and remain behind the F3SJ's detection zone, configure the system with an interlock function that prevents the machine from being restarted. Failure to do so may result in serious injury.

Install the interlock reset switch in a location that provides a clear view of the entire hazardous zone and where it cannot be activated from within the hazardous zone.

The F3SJ cannot protect a person from a projectile exiting the hazardous zone. Install protective cover(s) or fence(s).

Right positions

The hazardous zone of a machine can be reached only by passing through the sensor's detection zone.

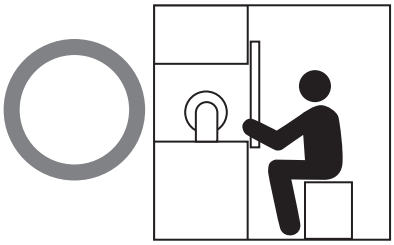

While working, a person is inside the sensor's detection zone.

Incorrect installation

It is possible to reach the hazardous zone of a machine without passing through the sensor's detection zone.

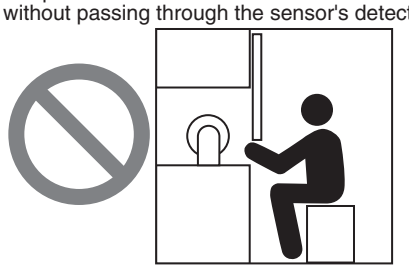

A person is between the sensor's detection zone and the hazardous zone of a machine.

Safety Safety Distance F3SJ-E F3SJ-B F3SJ-A

The safety distance is the distance that must be set between the F3SJ and a machine's hazardous part to stop the hazardous part before a person or object reaches it. The safety distance varies according to the standards of each country and the individual specifications of each machine. In addition, the calculation of the safety distance differs if the direction of approach is not vertical to the detection zone of the F3SJ. Always refer to relevant standards.

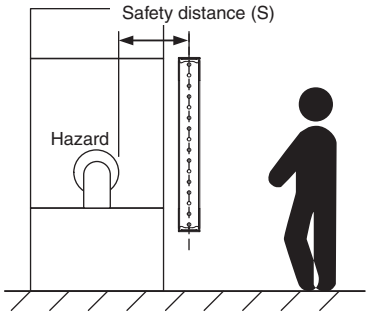

⚠ WARNING

Make sure to secure the safety distance (S) between the F3SJ and the hazardous part. Failure to do so may prevent the machinery from stopping before a person reaches the hazardous part of the machinery, and result in serious injury.

Note: The response time of a machine is the time period from when the machine receives a stop signal to when the machine's hazardous part stops. Measure the response time on the actual system. Also, periodically check that the response time of the machine has not changed.

How to calculate the safety distance specified by International Standard ISO 13855 (European Standard EN ISO 13855) (Reference)

Detection Zone Orthogonal to Direction of Approach

S = K x T + C . . . Formula (1)

- S: Safety distance
- K: Approach speed to the detection zone
- T: Total response time of the machine and F3SJ
- C: Additional distance calculated by the detection capability of the F3SJ

<System with a detection capability of 40 mm max.>
Use K = 2,000 mm/s and C = 8 x (d - 14 mm) in equation (1) for the calculation.
S = 2,000 mm/s x (Tm + Ts) + 8 x (d - 14 mm)

- S = Safety distance (mm)
- Tm = Machine's response time (s)
- Ts = Response time of the F3SJ from ON to OFF (s)
- d = Size of F3SJ's detection capability (mm)

[Calculation example]
When Tm = 0.05 s, Ts = 0.01 s, and d = 14 mm:
S = 2,000 mm/s x (0.05 s + 0.01 s) + 8 x (14 mm - 14 mm)
= 120 mm . . . Formula (2)
If the result is less than 100 mm, use S = 100 mm.
If the result exceeds 500 mm, use the following formula where K = 1,600 mm/s.
S = 1,600 mm/s x (Tm + Ts) + 8 x (d - 14 mm) . . . Formula (3)

If the result of this Formula (3) is less than 500 mm,
S = 500 mm

<System with a detection capability larger than 40 mm>
Use K = 1,600 mm/s and C = 8 x (d - 850 mm) in equation (1) for the calculation.
S = 1,600 mm/s x (Tm + Ts) + 850 x (d - 14 mm) ... Formula (4)

- S = Safety distance (mm)
- Tm = Machine's response time (s)
- Ts = Response time of the F3SJ from ON to OFF (s)

[Calculation example]
When Tm = 0.05 s, Ts = 0.01 s:
S = 1,600 mm/s x (0.05 s + 0.01 s) + 850 mm
= 946 mm

Possible Circumventing by Reaching Over the Detection Zone

If access to the hazardous zone by reaching over the detection zone of vertically mounted F3SJ cannot be excluded, the height and the safety distance, S, of the F3SJ shall be determined. S shall be determined by comparison of the calculated values in *Detection Zone Orthogonal to Direction of Approach*. The greater value resulting from this comparison shall be applied.

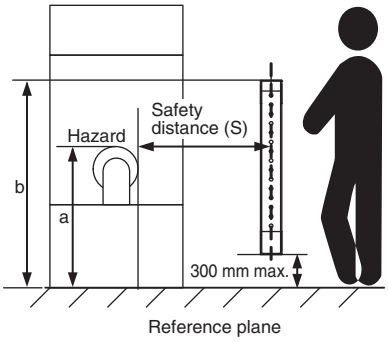

S=(K × T) + Cro . . . Formula (5)

- S: Safety distance
- K: Approach speed to the detection zone
- T: Total response time of the machine and F3SJ
- Cro: Approach distance based on the distance which personnel can move towards the hazardous zone of a machine by reaching over the detection zone. The distance is determined in the table below based on the height of the hazardous zone, a, and the height of the upper edge of the detection zone, b.

Note: Lower edge of the detection zone above 300 mm in relation to the reference plane does not offer sufficient protection against crawling below.

First, use K = 2,000 mm/s in formula (5) for the calculation. If the result of this calculation is less than 100 mm, use S = 100 mm. If the result exceeds 500 mm, use K = 1,600 mm/s to recalculate it. If the result of the recalculation is less than 500 mm, use S = 500 mm.

Height of hazardous zone, a	Height of upper edge of detection zone, b											
	900	1000	1100	1200	1300	1400	1600	1800	2000	2200	2400	2600
	Additional distance to hazardous zone, Cro											
2600	0	0	0	0	0	0	0	0	0	0	0	0
2500	400	400	350	300	300	300	300	300	250	150	100	0
2400	550	550	550	500	450	450	400	400	300	250	100	0
2200	800	750	750	700	650	650	600	550	400	250	0	0
2000	950	950	850	850	800	750	700	550	400	0	0	0
1800	1100	1100	950	950	850	800	750	550	0	0	0	0
1600	1150	1150	1100	1000	900	850	750	450	0	0	0	0
1400	1200	1200	1100	1000	900	850	650	0	0	0	0	0
1200	1200	1200	1100	1000	850	800	0	0	0	0	0	0
1000	1200	1150	1050	950	750	700	0	0	0	0	0	0
800	1150	1050	950	800	500	450	0	0	0	0	0	0
600	1050	950	750	550	0	0	0	0	0	0	0	0
400	900	700	0	0	0	0	0	0	0	0	0	0
200	600	0	0	0	0	0	0	0	0	0	0	0
0	0	0	0	0	0	0	0	0	0	0	0	0

Note: 1. Upper edge of the detection zone below 900 mm is not included since they do not offer sufficient protection against circumventing or stepping over.

2. When determining the values of this table, it shall not be interpolated. If the known values a, b or Cro are between two values of this table, the greater safety distance shall be used.

[Calculation example]

- T: Tm + Ts (s)
- Tm: Machine's response time (s)
- Ts: Response time of the F3SJ from ON to OFF (s)
- a: Height of machine hazardous zone (mm)
- b: Height of upper edge of detection zone (mm)

When Tm = 0.05 s, Ts = 0.01 s, a = 1,400 mm, b = 1,500 m:
From the table above, Cro = 850 mm. Since b is between 1,400 mm and 1,600 mm, b = 1,400 mm which has the greater Cro value, shall be used.
S = 2,000 mm/s × (0.05 s + 0.01 s) + 850 mm
= 970 mm
Since 970 mm is greater than 500 mm, use K = 1,600 mm/s and recalculate it.
S = 1,600 m/s × (0.05 s + 0.01 s) + 850 mm
= 946 mm

Compare S = 946 mm with the calculation in Detection Zone Orthogonal to Direction of Approach, and choose the larger value as the safety distance.
For the system with a detection capability of 40 mm max., the safety distance S is 946 mm since this is larger than S = 120 mm calculated in the calculation example of Detection Zone Orthogonal to Direction of Approach.
For the system with a detection capability larger than 40 mm, the safety distance S is 946 mm since this is the same value as S = 946 mm calculated in the calculation example of Detection Zone Orthogonal to Direction of Approach.

Detection Zone Parallel to Direction of Approach

Use K = 1,600 mm/s and C = (1200 - 0.4 x H) in formula (1) for calculation. Note that C must not be less than 850 mm.
S = 1,600 mm/s x (Tm + Ts) + 1200 - 0.4 x H

- S = Safety distance (mm)
- Tm = Machine's response time (s)
- Ts = Response time of F3SJ from ON to OFF (s)
- H = Installation height (mm)

Note that H must satisfy:
1000 ≥ H ≥ 15 (d - 50 mm) ≥ 0 mm

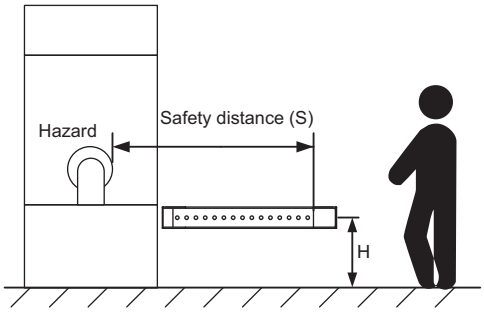

Also, you must include a hazardous condition under which a person may go through under a detection zone if H exceeds 300 mm (200 mm for other purpose than industrial use) into risk assessment.

[Calculation example]
When Tm = 0.05 s, Ts = 0.01 s, and d = 14 mm:
S = 1,600 mm/s x (0.05 s + 0.01 s) + 1200 - 0.4 x 500 mm
= 1096 mm

When a warning zone is configured as in the figure, you must calculate L, a distance from an end of casing to a detection zone, using a formula below:

L = (Total number of F3SJ beams - number of warning zone beams - 1) x P + 10

- P: Beam Gap (mm)
- F3SJ-A□□□□P14/N14 . . . 9 mm
- F3SJ-A□□□□P20/N20 . . . 15 mm
- F3SJ-A□□□□P25/N25 . . . 20 mm
- F3SJ-A□□□□P30/N30 . . . 25 mm
- F3SJ-A□□□□P55/N55 . . . 50 mm

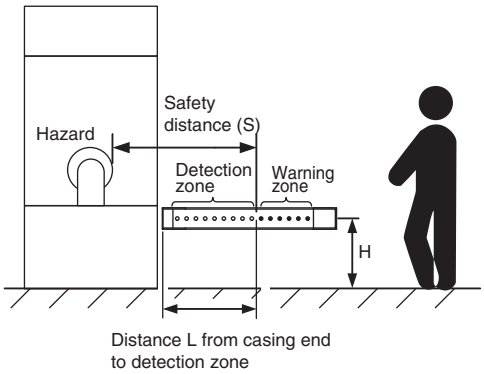

Refer to the F3SJ User's Manual for details. For manual number, check the "*Related Manuals*" at the end of the catalog.

How to calculate the safety distance specified by American standard ANSI B11.19 (Ref.)

If a person approaches the detection zone of the F3SJ orthogonally, calculate the safety distance as shown below.
S = K x (Ts + Tc + Tr + Tbm) + Dpf

- S: Safety distance
- K: Approach speed to the detection zone
  (the value recommended by OSHA standard is 1,600 mm/s)

Approach speed K is not specified in the ANSI B.11.19 standard. To determine the value of K to apply, consider all factors, including the operator's physical ability.

- Ts = Machine's stop time (s)
- Ts = Response time of the F3SJ from ON to OFF (s)
- Tc = Machine control circuit's maximum response time required to activate its brake (s)
- Tbm = Additional time (s)

If a machine has a brake monitor, "Tbm = Brake monitor setting time - (Ts + Tc)". If it has no brake monitor, we recommend using 20% or more of (Ts + Tc) as additional time.

- Dpf = Additional distance

According to ANSI's formula, Dpf is calculated as shown below:
Dpf = 3.4 x (d - 7.0): Where d is the detection capability of the F3SJ (unit: mm)

[Calculation example]
When K = 1,600 mm/s, Ts + Tc = 0.06 s, brake monitor setting time = 0.1 s, Tr = 0.01 s, and d = 14 mm:
Tbm = 0.1 - 0.06 = 0.04 s
Dpf = 3.4 x (14 - 7.0) = 23.8 mm
S = 1,600 mm/s x (0.06 s + 0.01 s + 0.04 s) + 23.8 mm = 199.8 mm

Distance from Reflective Surface F3SJ-E F3SJ-B F3SJ-A

⚠ WARNING

Install the sensor system so that it is not affected by reflection from a reflective surface. Failure to do so may hinder detection, resulting in serious injury.

Install the sensor system at distance D or further from highly reflective surfaces such as metallic walls, floors, ceilings, or workpieces, as shown below.

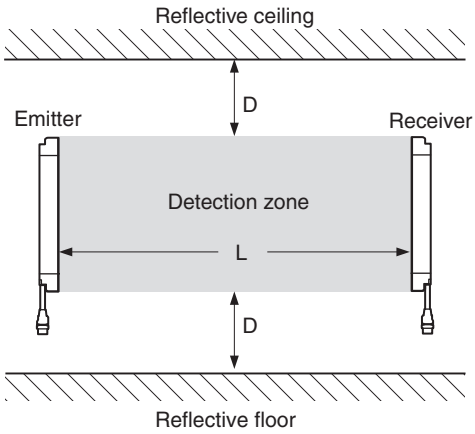

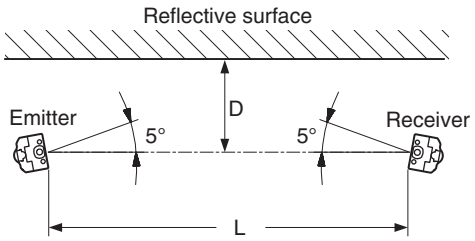

Distance between emitter and receiver (operating range L)	Allowable installation distance D
For 0.2 to 3 m	0.13 m
For 3 m or more	L/2 x tan5° = L x 0.044 (m)

Mutual Interference Prevention F3SJ-E F3SJ-B F3SJ-A

⚠ WARNING

Do not use the sensor system with mirrors in a regressive reflective configuration. Doing so may hinder detection. It is possible to use mirrors to "bend" the detection zone to a 90-degree angle.

When using more than 1 set of F3SJ, install them so that mutual interference does not occur, such as by configuring series connections or using physical barriers between adjacent sets.

Mutual interference from other F3SJ is prevented in up to 3 sets without series connection.

For series connection F3SJ-B F3SJ-A

Series connection can prevent mutual interference when multiple sensors are used. Up to 3 sets with 192 beam for F3SJ-B series, or up to 4 sets with 400 beams for F3SJ-A series can be series-connected. Emission of series-connected F3SJ is time-divided, ensuring safety without occurring mutual interference.

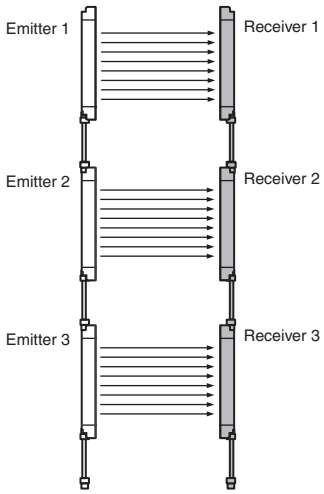

No series connections F3SJ-B F3SJ-A

Mutual interference is prevented in up to three sets, using interference light detection and cycle shift algorithm.
If 4 or more sets of F3SJs are installed and are not connected to each other, arrange them so that mutual interference does not occur.
If two sets are installed near each other, reflection from the surface of the F3SJ may cause mutual interference. When mutual interference occurs, the safety outputs are turned OFF momentarily or the F3SJ enters lockout state. Combining countermeasures 1 to 3 shown below is effective.

1. Install a physical barrier

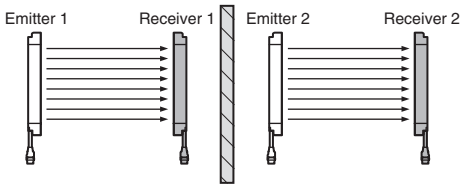

2. Alternate the direction of emission (alternation)

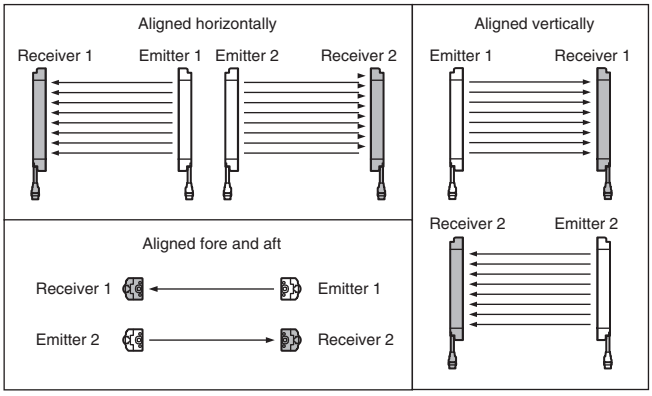

3. Keep sufficient distance between the F3SJs so that mutual interference does not occur

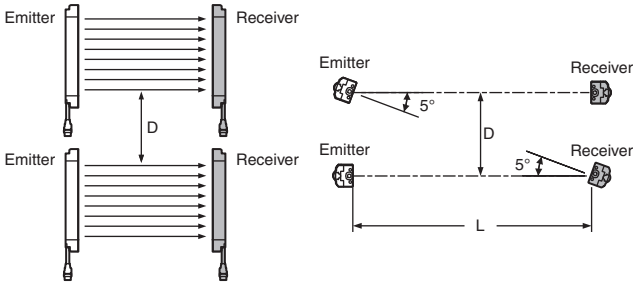

Distance between emitter and receiver (operating range L)	Allowable installation distance D
For 0.2 to 3 m	0.26 m
For 3 m or more	L x tan5° = L x 0.088 (m)

Installation shown below may cause mutual interference. When mutual interference occurs, the safety outputs are turned OFF momentarily or the F3SJ enters lockout state.

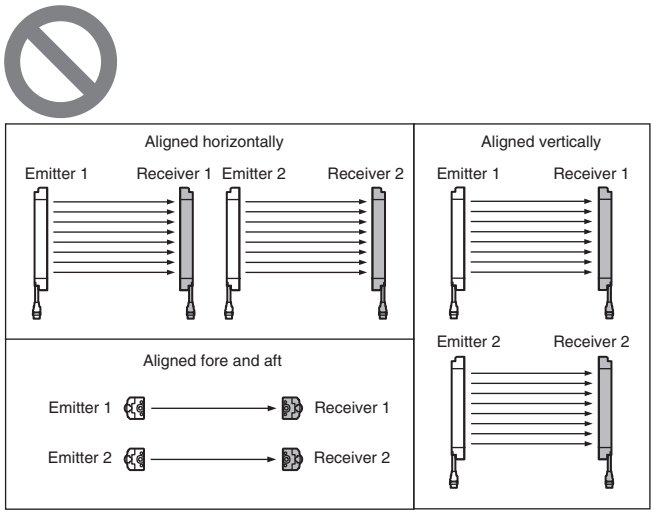

F3SJ-A

If two sets are installed near each other, reflection from the surface of the F3SJ may cause mutual interference. Use of F3SJ-A can improve the condition by shortening operating range with the setting tool.

< Before the change >

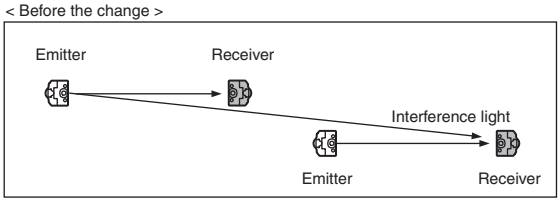

< After the change >

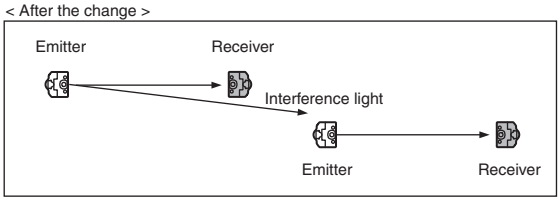

Related Manuals

Man. No.	Model	Manual name
SCHG-718	F3SJ-A□□□□P□□	F3SJ-A□□□□P□□ (Ver.2) Safety Light Curtain User's Manual
SCHG-720	F3SJ-A□□□□P□□-TS	F3SJ-A□□□□P□□-TS Safety Light Curtain User's Manual
SCHG-722	F3SJ-A□□□□P20-01TS	F3SJ-A□□□□P20-01TS Safety Light Curtain User's Manual
SCHG-719	F3SJ-A□□□□N□□	F3SJ-A□□□□N□□(Ver.2) Safety Light Curtain User's Manual
SCHG-726	F3SJ-A□□□□N□□-01T	F3SJ-A□□□□N□□-01T(Ver.2) Safety Light Curtain User's Manual
SCHG-716	F3SJ-AM□P□□□	F3SJ-AM□P□□□(Ver.2) Multi-beam Safety Sensor User's Manual
SCHG-734	F3SJ-B□□□□P25-01TS	F3SJ-B□□□□P25-01TS Safety Light Curtain User's Manual
SCHG-733	F3SJ-E□□□□N25/B□□□□N25	F3SJ-E□□□□N25/B□□□□N25 Safety Light Curtain User's Manual
SCHG-732	F3SJ-E□□□□P25/B□□□□P25	F3SJ-E□□□□P25/B□□□□P25 Safety Light Curtain User's Manual
SCHG-712	F39-MC21	F39-MC21 F39-MC21 Setting Console Instruction Sheet
SCHG-736	F3SJ-B□□□□P25-02TS	F3SJ-B□□□□P25-02TS Safety Light Curtain User's Manual

Terms and Conditions Agreement

Read and understand this catalog.

Please read and understand this catalog before purchasing the products. Please consult your OMRON representative if you have any questions or comments.

Warranties.

(a) Exclusive Warranty. Omron's exclusive warranty is that the Products will be free from defects in materials and workmanship for a period of twelve months from the date of sale by Omron (or such other period expressed in writing by Omron). Omron disclaims all other warranties, express or implied.

(b) Limitations. OMRON MAKES NO WARRANTY OR REPRESENTATION, EXPRESS OR IMPLIED, ABOUT NON-INFRINGEMENT, MERCHANTABILITY OR FITNESS FOR A PARTICULAR PURPOSE OF THE PRODUCTS. BUYER ACKNOWLEDGES THAT IT ALONE HAS DETERMINED THAT THE PRODUCTS WILL SUITABLY MEET THE REQUIREMENTS OF THEIR INTENDED USE.

Omron further disclaims all warranties and responsibility of any type for claims or expenses based on infringement by the Products or otherwise of any intellectual property right. (c) Buyer Remedy. Omron's sole obligation hereunder shall be, at Omron's election, to (i) replace (in the form originally shipped with Buyer responsible for labor charges for removal or replacement thereof) the non-complying Product, (ii) repair the non-complying Product, or (iii) repay or credit Buyer an amount equal to the purchase price of the non-complying Product; provided that in no event shall Omron be responsible for warranty, repair, indemnity or any other claims or expenses regarding the Products unless Omron's analysis confirms that the Products were properly handled, stored, installed and maintained and not subject to contamination, abuse, misuse or inappropriate modification. Return of any Products by Buyer must be approved in writing by Omron before shipment. Omron Companies shall not be liable for the suitability or unsuitability or the results from the use of Products in combination with any electrical or electronic components, circuits, system assemblies or any other materials or substances or environments. Any advice, recommendations or information given orally or in writing, are not to be construed as an amendment or addition to the above warranty.

See http://www.omron.com/global/ or contact your Omron representative for published information.

Limitation on Liability; Etc.

OMRON COMPANIES SHALL NOT BE LIABLE FOR SPECIAL, INDIRECT, INCIDENTAL, OR CONSEQUENTIAL DAMAGES, LOSS OF PROFITS OR PRODUCTION OR COMMERCIAL LOSS IN ANY WAY CONNECTED WITH THE PRODUCTS, WHETHER SUCH CLAIM IS BASED IN CONTRACT, WARRANTY, NEGLIGENCE OR STRICT LIABILITY.

Further, in no event shall liability of Omron Companies exceed the individual price of the Product on which liability is asserted.

Suitability of Use.

Omron Companies shall not be responsible for conformity with any standards, codes or regulations which apply to the combination of the Product in the Buyer's application or use of the Product. At Buyer's request, Omron will provide applicable third party certification documents identifying ratings and limitations of use which apply to the Product. This information by itself is not sufficient for a complete determination of the suitability of the Product in combination with the end product, machine, system, or other application or use. Buyer shall be solely responsible for determining appropriateness of the particular Product with respect to Buyer's application, product or system. Buyer shall take application responsibility in all cases.

NEVER USE THE PRODUCT FOR AN APPLICATION INVOLVING SERIOUS RISK TO LIFE OR PROPERTY OR IN LARGE QUANTITIES WITHOUT ENSURING THAT THE SYSTEM AS A WHOLE HAS BEEN DESIGNED TO ADDRESS THE RISKS, AND THAT THE OMRON PRODUCT(S) IS PROPERLY RATED AND INSTALLED FOR THE INTENDED USE WITHIN THE OVERALL EQUIPMENT OR SYSTEM.

Programmable Products.

Omron Companies shall not be responsible for the user's programming of a programmable Product, or any consequence thereof.

Performance Data.

Data presented in Omron Company websites, catalogs and other materials is provided as a guide for the user in determining suitability and does not constitute a warranty. It may represent the result of Omron's test conditions, and the user must correlate it to actual application requirements. Actual performance is subject to the Omron's Warranty and Limitations of Liability.

Change in Specifications.

Product specifications and accessories may be changed at any time based on improvements and other reasons. It is our practice to change part numbers when published ratings or features are changed, or when significant construction changes are made. However, some specifications of the Product may be changed without any notice. When in doubt, special part numbers may be assigned to fix or establish key specifications for your application. Please consult with your Omron's representative at any time to confirm actual specifications of purchased Product.

Errors and Omissions.

Information presented by Omron Companies has been checked and is believed to be accurate; however, no responsibility is assumed for clerical, typographical or proofreading errors or omissions.

Note: Do not use this document to operate the Unit.

OMRON Corporation **Industrial Automation Company**
Kyoto, JAPAN
Contact: www.ia.omron.com

Regional Headquarters
OMRON EUROPE B.V.
Wegalaan 67-69, 2132 JD Hoofddorp
The Netherlands
Tel: (31)2356-81-300/Fax: (31)2356-81-388

OMRON ELECTRONICS LLC
2895 Greenspoint Parkway, Suite 200
Hoffman Estates, IL 60169 U.S.A.
Tel: (1) 847-843-7900/Fax: (1) 847-843-7787

OMRON ASIA PACIFIC PTE. LTD.
No. 438A Alexandra Road # 05-05/08 (Lobby 2),
Alexandra Technopark,
Singapore 119967
Tel: (65) 6835-3011/Fax: (65) 6835-2711

OMRON (CHINA) CO., LTD.
Room 2211, Bank of China Tower,
200 Yin Cheng Zhong Road,
PuDong New Area, Shanghai, 200120, China
Tel: (86) 21-5037-2222/Fax: (86) 21-5037-2200

Authorized Distributor:

© OMRON Corporation 2005-2018 All Rights Reserved.
In the interest of product improvement,
specifications are subject to change without notice.

CSM_27_1_0218
Cat. No. F074-E1-12 0218 (0505)